PROJECT NAME:	Hesse Park Athletic Field Renovations				
	City of Rancho Palos Verdes, CA				
Valve #:	15				12/06/10
GPM:	56				
STATIC PRESSURE	Avg:	75	(at backflow inlet)		
Information Provided by:	Emilio Blanco, City of Rancho Palos Verdes				
Date:	11/19/2010				
Equipment	**Size**	**Length**		**GPM**	**Total PSI Loss**
Meter - Assuming 4"	4"		@	56	0.00
Backflow Device	4"		@	56	12.00
Mainline (Sch. 40)	4"	747'	@	56	0.60
Master Valve	3"		@	56	1.20
Gate/Ball Valve	4"		@	56	1.00
Control Valve	2.5"		@	56	1.20
Lateral Lines - Sch. 40	2.5"	23'	@	56	0.20
	1.5"	21'	@	28	0.43
	1.25"	82'	@	21	2.04
	3/4"	42'	@	7	1.68
SUBTOTAL:					**20.35**
Loss through fittings		10%			2.04
Sprinkler head PSI needed					40.00
Elevation change		-5.00	ft		-2.17
TOTAL SYSTEM LOSSES:					**60.22**
LOWEST STATIC PRESSURE AVAILABLE:					75.00
TOTAL RESIDUAL PRESSURE:					**14.78**
RECOMMENDED RESIDUAL WATER PRESSURE 15-20 PSI					
SYSTEM DESIGN PRESSURE:					**75**

(I) PRESSURE LOSS CALCULATION

IRRIGATION NOTES:

1. THIS IRRIGATION DESIGN IS DIAGRAMMATIC. ALL PIPING, VALVES, ETC. SHOWN WITHIN PAVED AREAS ARE FOR DESIGN CLARIFICATION ONLY AND SHALL BE INSTALLED IN PLANTING AREAS WHEREVER POSSIBLE. SEE DETAILS FOR VERTICAL AND HORIZONTAL ALIGNMENT OF ALL PIPING AND EQUIPMENT.
2. SET ALL VALVES AND QUICK COUPLERS NEXT TO WALKS OR PAVED SURFACES.
3. ALL SPRINKLER HEADS ARE TO HAVE TRIPLE SWING JOINTS (EXCEPT WHERE NOTED ON PLANS).
4. PIPE SIZES SHALL CONFORM TO THOSE SHOWN ON THE DRAWINGS. NO SUBSTITUTIONS OF SMALLER PIPE SIZES SHALL BE PERMITTED, BUT SUBSTITUTIONS OF LARGER SIZES MAY BE APPROVED. ALL DAMAGED AND REJECTED PIPE SHALL BE REMOVED FROM THE SITE AT THE TIME OF THE SAID REJECTION.
5. FINAL LOCATION OF THE AUTOMATIC CONTROLLER AND WEATHER AND/OR RAIN SENSOR SHALL BE APPROVED BY THE LANDSCAPE ARCHITECT AND CITY PROJECT MANAGER.
6. PROVIDE SEPARATE WIRE COLORS FOR EACH IRRIGATION VALVE FROM CONTROLLER TO VALVES.
7. PVC SHALL BE LAID WITH HORIZONTAL CONNECTINS.
8. SCHEDULE 40 OR ABOVE ONLY ON PVC. NO CLASS 200.
9. PRESSURE TEST ON ALL MAINLINES 4 HOURS AT 150 PSI. CALL INSPECTOR PRIOR TO STARTING TEST.
10. REPORT PRESSURE READING TO LANDSCAPE ARCHITECT OR RECORD PRIOR TO STARTING CONSTRUCTION.
11. BEFORE COMMENCING ANY EXCAVATION, THE CONTRACTOR SHALL OBTAIN AN UNDERGROUND SERVICE ALERT I.D. NUMBER BY CALLING 1-800-422-4133. TWO (2) WORKING DAYS SHALL BE ALLOWED AFTER THE I.D.NUMBER IS OBTAINED AND BEFORE THE EXCAVATION WORK IS STARTED SO THAT UTILITY OWNERS CAN BE NOTIFIED.
12. ALL SPRINKLER HEADS SHALL BE SET PERPENDICULAR TO FINISH GRADE UNLESS OTHERWISE SPECIFIED.
13. THE CONTRACTOR SHALL FLUSH AND ADJUST ALL SPRINKLER HEADS AND VALVES FOR OPTIMUM COVERAGE WITH ZERO OVER SPRAY (RUN-OFF) ONTO WALKS, STREETS, ETC. THE CITY PROHIBITS OVERSPRAY ONTO ROADS AND SIDEWALKS. ADJUST RADIUS AND ARC FOR FULL COVERAGE WITHOUT OVERSPRAY.
14. IT IS THE RESPONSIBILITY OF THE IRRIGATION CONTRACTOR TO FAMILIARIZE HIMSELF WITH THE GRADE DIFFERENCES, LOCATION OF WALLS, AND UTILITIES. THE IRRIGATION CONTRACTOR SHALL REPAIR OR REPLACE ALL ITEMS DAMAGED BY HIS WORK. HE SHALL COORDINATE HIS WORK WITH OTHER CONTRACTORS FOR THE LOCATION AND INSTALLATION OF PIPE SLEEVES AND LATERALS UNDER ROADWAYS AND PAVING, ETC. THE SPRINKLER SYSTEM DESIGN IS BASED ON A SYSTEM DESIGN PRESSURE INDICATED IN THE PRESSURE LOSS CALCULATION AND A MAXIMUM FLOW DEMAND OF 91 G.P.M. THE CONTRACTOR SHALL VERIFY WATER PRESSURES PRIOR TO CONSTRUCTION. REPORT ANY DIFFERENCE BETWEEN WATER PRESSURE INDICATED ON THE DRAWINGS AND THE ACTUAL PRESSURE READING AT THE IRRIGATION POINT OF CONNECTION TO THE ARCHITECT.
15. DO NOT WILLFULLY INSTALL THE SPRINKLER SYSTEM AS SHOWN ON THE DRAWINGS WHEN IT IS OBVIOUS IN THE FIELD THAT THERE ARE UNKNOWN OBSTRUCTIONS OR GRADE DIFFERENCES IN THE AREA. DIMENSIONS EXIST THAT MIGHT NOT HAVE BEEN CONSIDERED IN THE ENGINEERING. SUCH OBSTRUCTIONS OR DIFFERENCES SHOULD BE BROUGHT TO THE ATTENTION OF THE ARCHITECT. IN THE EVENT THAT THIS NOTIFICATION IS NOT GIVEN, THE CONTRACTOR SHALL ASSUME FULL RESPONSIBILITY FOR ANY NECESSARY REVISIONS.
16. ALL SPRINKLER EQUIPMENT NOT OTHERWISE DETAILED OR SPECIFIED SHALL BE INSTALLED AS PER MANUFACTURER'S RECOMMENDATIONS AND SPECIFICATIONS.
17. THE INTENT OF THE DESIGN IS TO PROVIDE 100% COVERAGE TO ALL PLANTING AREAS. AS PART OF THE SCOPE OF WORK, PROVIDE ANY ADDITIONAL HEADS, SPECIAL NOZZLES, OR PATTERNS TO ACHIEVE PROPER COVERAGE WITH A MINIMUM OF OVER SPRAY AT NO ADDITIONAL COST TO THE OWNER.
18. INSTALLATION FOR THE CONTROL WIRES SHALL FOLLOW MAINLINE ROUTING.
19. SLEEVE MAIN AND LATERAL LINES UNDER PAVED SURFACES WITH PIPE 2X PIPE DIAMETER.
20. NEW SLEEVING TO BE INSTALLED 36" BELOW GRADE UNDER ROADWAYS. DEPTH T BE COORDINATED IN THE FIELD WITH EXISTING UTILITY LINES. IT IS THE CONTRACTOR'S RESPONSIBILITY TO LOCATE ALL EXISTING UTILITY LINES.
21. NEW SLEEVING UNDER ROADWAYS SHALL BE INSTALLED BY DIRECTION BORING. NO CUTTING OF EXISTING PAVEMENT, CURB, OR GUTTER WHICH SHALL BE PROTECTED IN PLACE.
22. IT IS THE RESPONSIBILITY OF THE CONTRACTOR TO REPAIR ANY DAMAGE TO EXISTING UTILITIES, PAVEMENT, OR LANDSCAPE TO REMAIN CAUSED BY CONTRACTOR'S ACTIONS.
23. LOCATE "AS-BUILT" VALVE CHART IN CONTROLLER - REDUCE AND ENCASE IN PLASTIC.
24. THE CONTRACTOR SHALL GUARANTEE THE INSTALLED IRRIGATION SYSTEM FOR A PERIOD OF ONE (1) YEAR FROM THE DATE OF ACCEPTANCE OF THE WORK. SHOULD ANY TROUBLE DEVELOP WITHIN THE TIME SPECIFIED DUE TO INFERIOR OR FAULTY MATERIAL OR WORKMANSHIP, THE TROUBLE SHALL BE CORRECTED BY THE CONTRACTOR WITHOUT EXPENSE TO THE OWNER.
25. CHECK VALVES SHALL BE INSTALLED IN-LINE OR IN-HEAD TO PREVENT LOW HEAD DRAINAGE.
26. ALL VALVE BOXES SHALL BE PERMANENTLY ETCHED TO INDICATE EQUIPMENT INSTALLED.
27. REFER TO SPECIFICATIONS FOR ADDITIONAL INFORMATION REGARDING THIS SECTION OF WORK.
28. WHEN INSTALLATION OF THE IRRIGATION SYSTEM IS COMPLETED, PERFORM A COVERAGE TEST IN THE PRESENCE OF THE CITY PROJECT MANAGER AND LANDSCAPE ARCHITECT TO DETERMINE THAT COVERAGE FOR PLANTING AND TURF AREAS IS COMPLETE AND ADEQUATE. WHERE INADEQUATE COVERAGE OCCURS DUE TO DEVIATIONS FROM PLANS, OR SITE CONDITIONS DIFFER AND THE SYSTEM HAS BEEN INSTALLED WITHOUT NOTIFYING THE OWNER'S REPRESENTATIVE, THE IRRIGATION CONTRACTOR SHALL PROVIDE NECESSARY MATERIAL AND PERFORM WORK TO CORRECT ALL INADEQUACIES WITHOUT ADDITIONAL COST. *THESE TESTS AND CORRECTIONS SHALL BE ACCOMPLISHED BEFORE ANY SHRUBS, GROUND COVER OR TURF IS PLANTED.*
29. THIS SYSTEM CONNECTS TO AN EXISTING IRRIGATION SYSTEM AND POINT OF CONNECTION. A NEW FLOW SENSOR, MASTER VALVE, SHUT OFF VALVES, REMOTE CONTROL VALVES, QUICK COUPLERS AND A NEW CONTROLLER SHALL BE PROVIDED UNDER THE SCOPE OF WORK OF THE FIELD RENOVATIONS.
30. EXISTING FIELD IRRIGATION SHALL BE ABANDONED IN PLACE. EXISTING IRRIGATION OUTSIDE OF THE FIELD RENOVATION SHALL BE MAINTAINED IN PROPER AND CONSTANT WORKING CONDITION THROUGHOUT THE DURATION OF THE RENOVATIONS.
31. REMOVE ALL EXISTING (AND ABANDONED) IRRIGATION VALVES AND HEADS DURING DEMOLITION AND RETURN TO CITY PROJECT MANAGER. RESTORE AREA TO GRADE AND REPAIR TURF. REMOVE AND DISPOSE OF ANY ABANDONED EQUIPMENT AS ENCOUNTERED. CAP ALL LINES.

(J) IRRIGATION NOTES

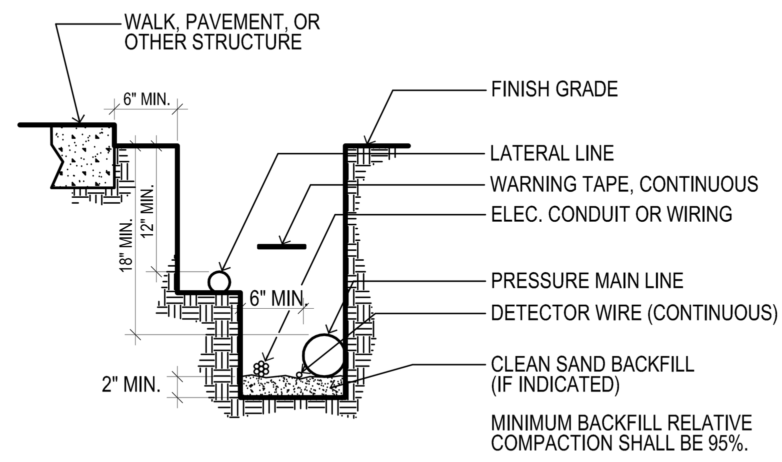

NOTES:
1. ALL PLASTIC PIPING TO BE SNAKED IN TRENCHES
2. BUNDLE & TAPE CONTROL WIRES AT 10' INTERVALS
3. TIE A LOOSE 20" LOOP IN WIRING AT CHANGE OF DIRECTION GREATER THAN 30°. UNTIE ALL LOOPS AFTER ALL CONNECTIONS HAVE BEEN MADE.
4. UNDER PAVED AREAS, ALL PRESSURE LINES & WIRES SHALL BE SLEEVED W/ SCH. 80 P.V.C. PIPE & SHALL BE 24" IN DEPTH (MIN.)
5. INSTALL ALL CONTROL WIRES ON UNDERSIDE OF MAINLINE PIPE
6. PIPE DEPTH FOR 2-1/2" AND LARGER SHALL BE 24" MINIMUM.
7. PIPE DEPTH FOR 2" AND SMALLER SHALL BE 18" MINIMUM.
8. PIPE DEPTH FOR ALL NON-PRESSURE LATERAL LINES SHALL BE 12" MINIMUM.

(E) TRENCHING

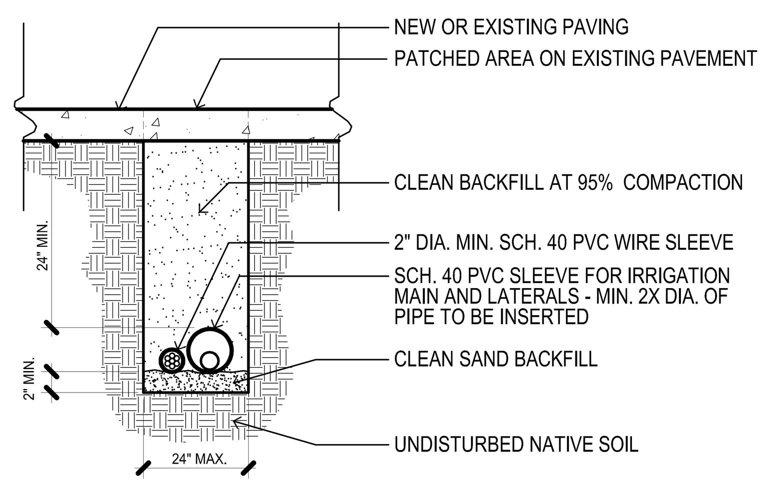

(F) SLEEVING

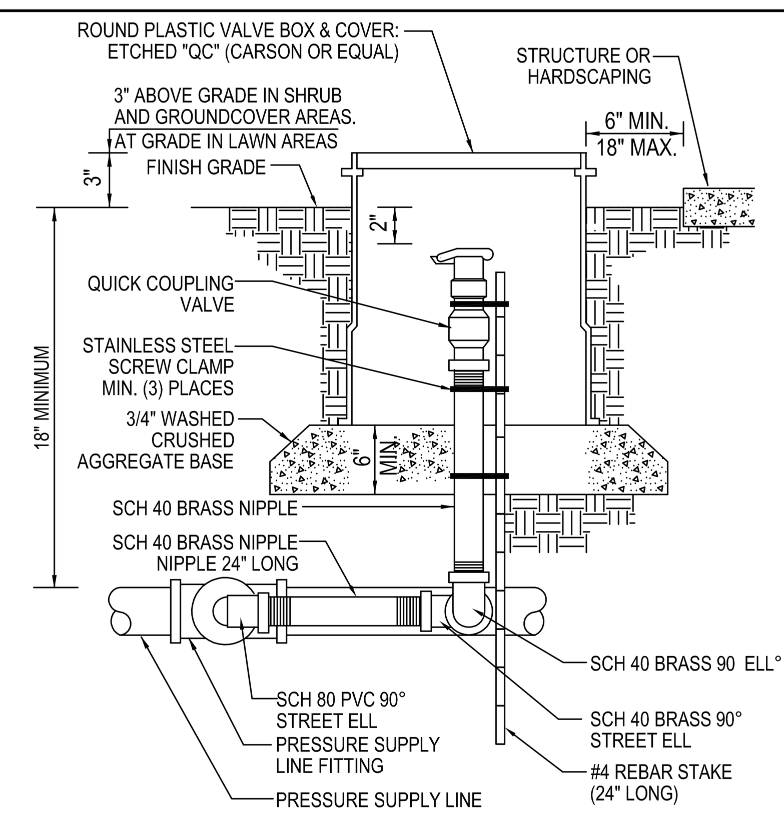

NOTE:
1. PLACE AGGREGATE PRIOR TO INSTALLATION OF VALVE BOX.

(G) QUICK COUPLER

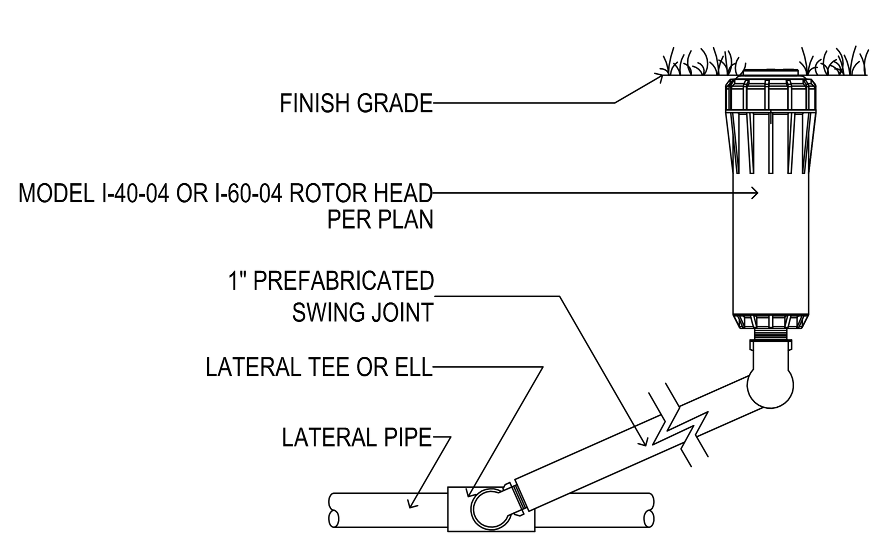

(H) POP-UP ROTOR (I-40 & I-60)

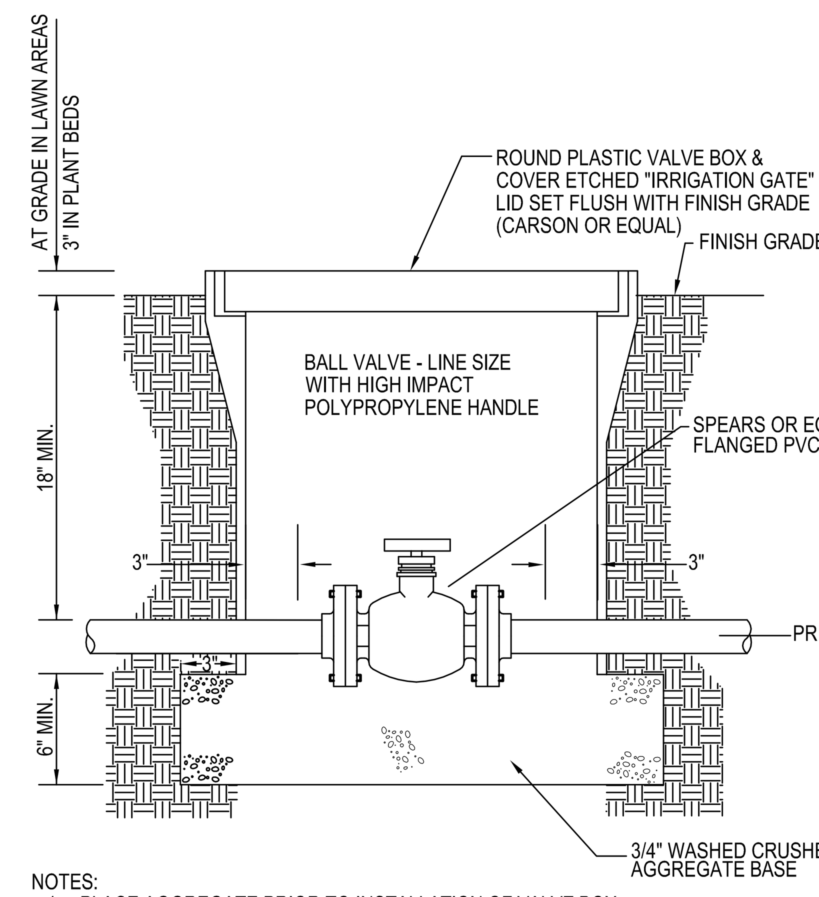

NOTES:
1. PLACE AGGREGATE PRIOR TO INSTALLATION OF VALVE BOX.
2. INSTALL CONTROL VALVES A MIN. OF 12" FROM STRUCTURES OR HARDSCAPING.
3. INSTALL VALVES IN PLANTER AREAS AND WHERE EVER POSSIBLE NEXT TO SIDEWALKS.
4. PLACE VALVE BOX AT RIGHT ANGLES TO STRUCTURES OR HARDSCAPING.
5. PLACE AGGREGATE PRIOR TO INSTALLATION OF VALVE BOX.

(C) SHUT-OFF VALVE

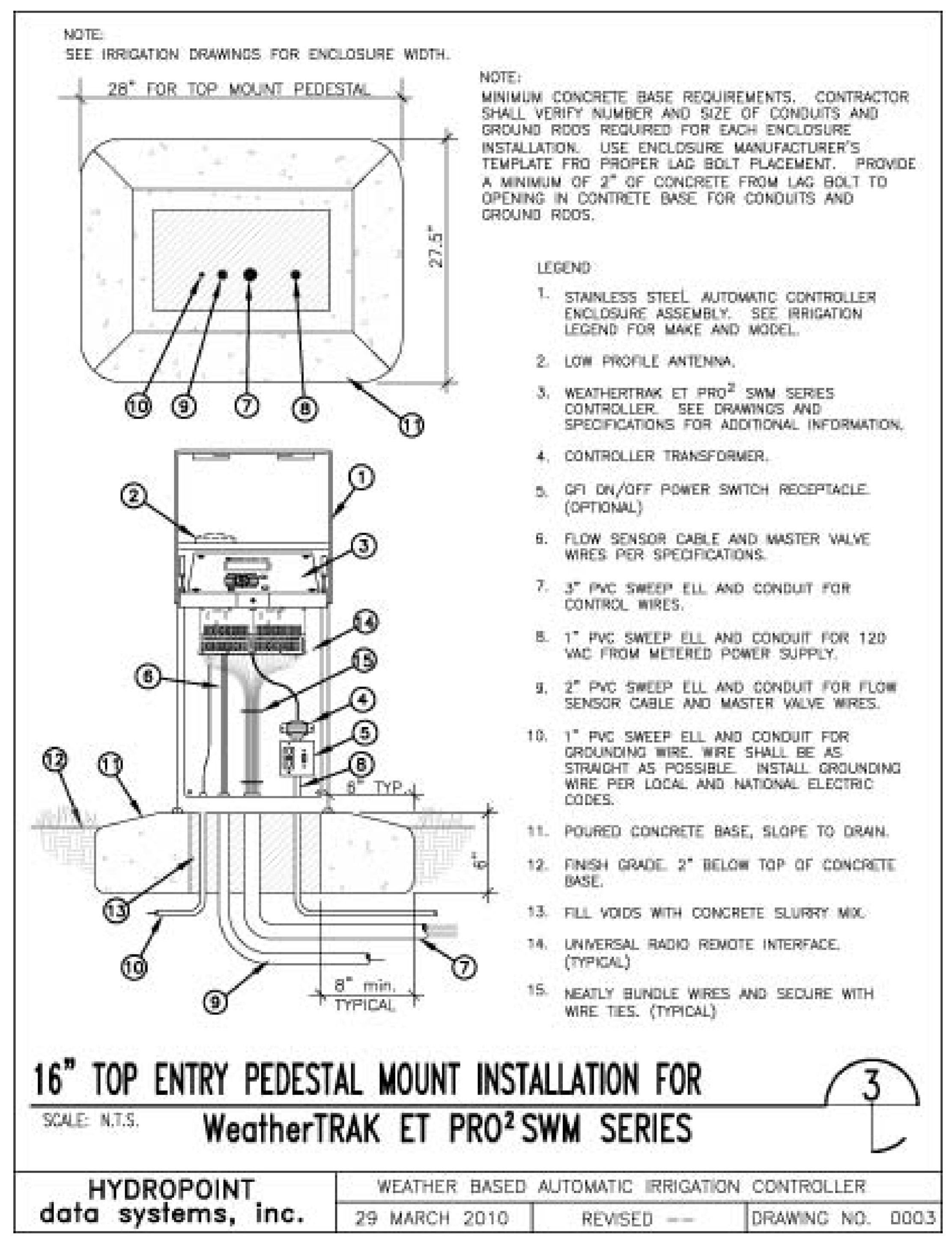

(D) CONTROLLER

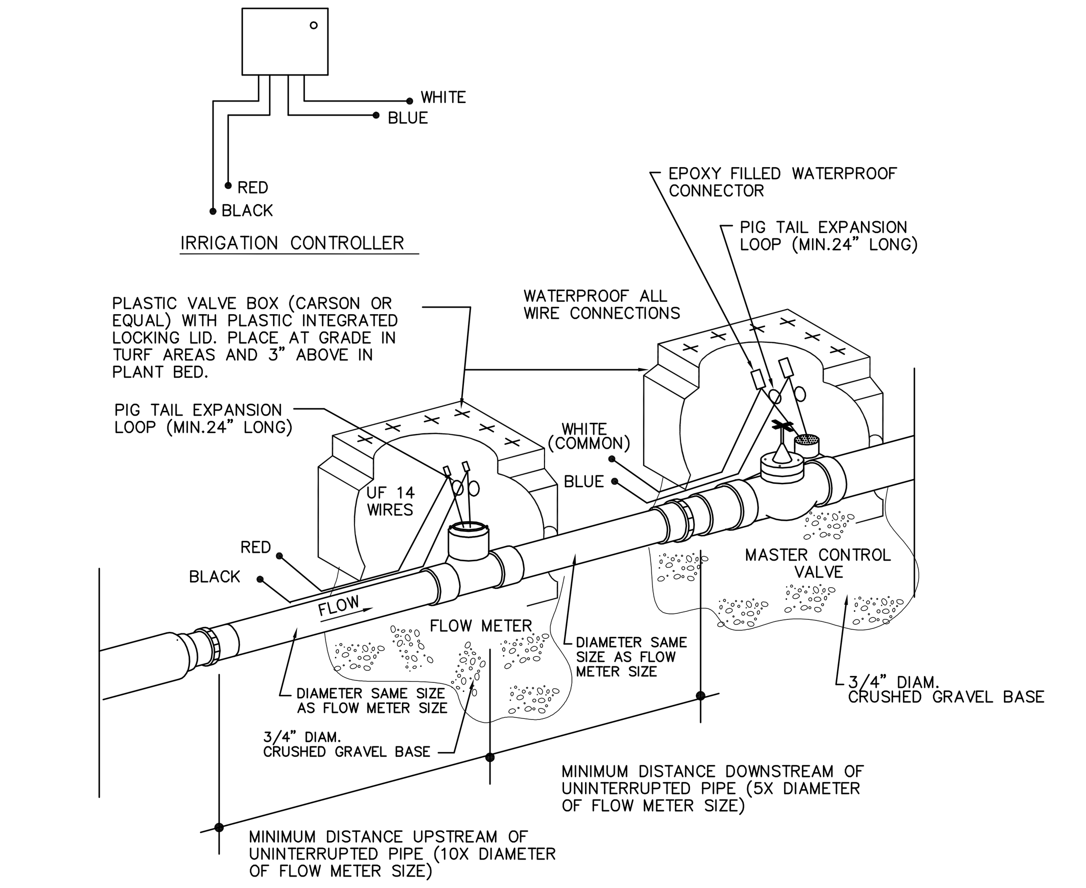

(A) FLOW SENSOR AND MASTER VALVE

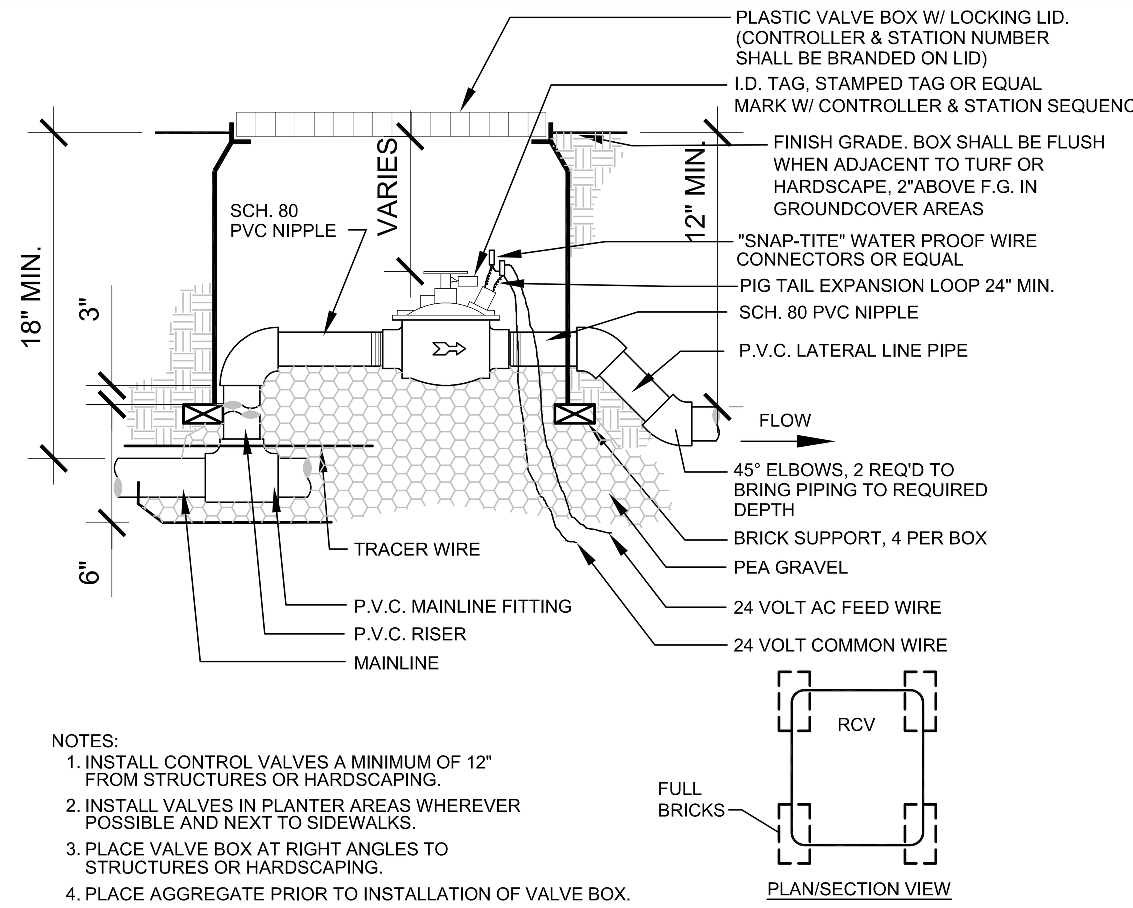

NOTES:
1. INSTALL CONTROL VALVES A MINIMUM OF 12" FROM STRUCTURES OR HARDSCAPING.
2. INSTALL VALVES IN PLANTER AREAS WHEREVER POSSIBLE AND NEXT TO SIDEWALKS.
3. PLACE VALVE BOX AT RIGHT ANGLES TO STRUCTURES OR HARDSCAPING.
4. PLACE AGGREGATE PRIOR TO INSTALLATION OF VALVE BOX.

(B1) REMOTE CONTROL VALVE

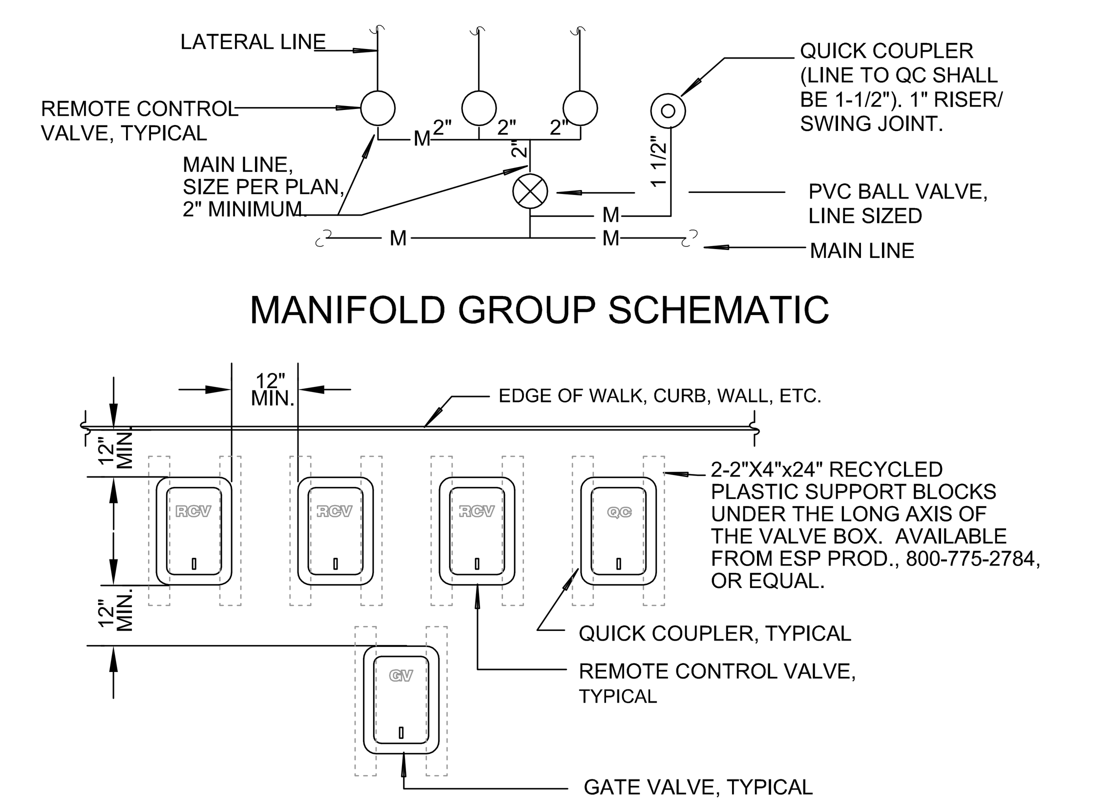

NOTES:
1. ALL VALVES SHALL BE RUN OFF A MANIFOLD GROUP SIMILAR TO THAT SHOWN IN ABOVE SCHEMATIC.
2. ALL BOXES SHALL BE SQUARE TO ONE ANOTHER, AND TO EDGES OF ADJACENT FIXED OBJECTS.
3. ALL VALVE BOXES SHALL BE SET FLUSH TO FINISH GRADE.

(B2) RCV MANIFOLD

DIAL BEFORE YOU DIG
DIAL 8-1-1 FROM ANY PHONE OR VIA WEB AT: http://www.digalert.org/digexpress.asp
DIGALERT
PLAY IT SAFE. DIAL BEFORE YOU DIG!
AT LEAST TWO WORKING DAYS PRIOR TO EXCAVATING
SERVING NINE SOUTHERN CALIFORNIA COUNTIES

REVIEW BY STAFF	BY	DATE
TRAFFIC		
WATER		
SEWER		
PLANNING		
APPROVED BY		

RAY HOLLAND
DIRECTOR OF PUBLIC WORKS
CITY OF RANCHO PALOS VERDES
DATE ________

Withers Sandgren Landscape Architecture
WITHERS & SANDGREN
LANDSCAPE ARCHITECTURE & PLANNING
P.O. BOX 276
MONTROSE, CA 91021-0276
(818) 291-0200
(818) 882-8394 Fax
DELIVERIES
20948 TULSA STREET
CHATSWORTH, CA 91311
mail@withersandsandgren.com

SHEET TITLE

IRRIGATION DETAILS

PROJECT TITLE

FRED HESSE JR. PARK
FIELD RENOVATION PROJECT
HAWTHORNE BLVD.
RANCHO PALOS VERDES, CA

REVISIONS	DATE
1.	
2.	
3.	
4.	
5.	
6.	
7.	
8.	

DRAWN BY:	DH/PBN
CHECKED BY:	LW
PROJECT NO.	0807
DATE:	12/17/2010

LICENSED LANDSCAPE ARCHITECT
LACEY M. WITHERS 3820
Signature
8/31/2011
Renewal Date
12/17/2010
Date
STATE OF CALIFORNIA

SHEET 5 OF 5

L-4