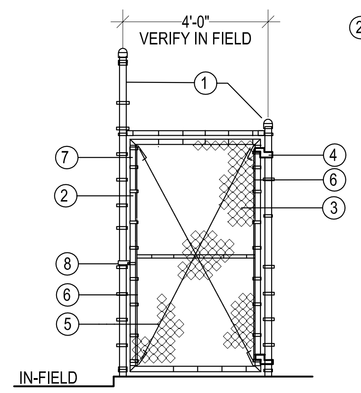

1. EX. POSTS AT END OF DUGOUT.
2. GATE FRAME, TOP, BOTTOM & SIDE MEMBERS 2 3/8" Ø. MID-RAIL, 1 5/8" Ø. MITER GATE FRAME CORNERS WELD AND GRIND SMOOTH.
3. VINYL-COATED C.L. FABRIC, 9 GAUGE 1-1/4" MESH, KNUCKLE TOP AND BOTTOM, PLACE ON INSIDE OF DUGOUT.
4. HINGES: INDUSTRIAL BULLDOG HINGE WITH 180° SWING, TWO HINGES PER GATE, ONE AT TOP AND BOTTOM.
5. TRUSS ROD, 3/8"Ø, THREADED AT BOTH ENDS AND TENSIONED WITH 2 INDUSTRIAL TRUSS
6. TIGHTENERS SECURED TO GATE FRAME. STRETCHER BAR, 3/16"X 3/4" WITH 7/8" x 1" TENSION BANDS @ 1' O.C.
7. TIE WIRES: 11 GAUGE @ 1'-6" O.C. AT TOP, BOTTOM, AND MID RAIL OF GATE.
8. PROVIDE FORK LATCH

E DUGOUT GATE INSTALLATION

NOTE: SEE SHEET L-2 FOR MAKE AND MODEL INFORMATION.

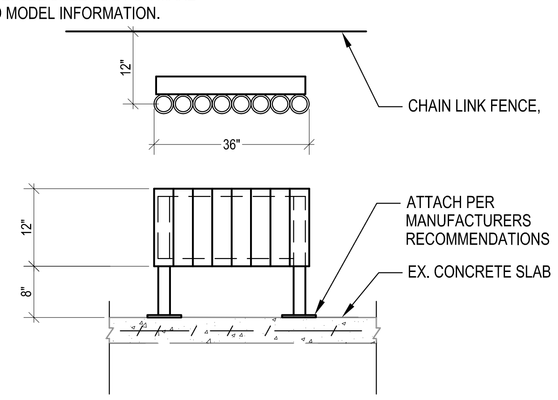

NOTE: CONFIRM LOCATION OF BAT RACK IN FIELD UNDER THE DIRECTION OF PROJECT MANAGER. IF DUGOUT IS TOO NARROW ALTERNATIVE LOCATION WILL BE DETERMINED. PROVIDE ALL DIMENSIONS IN SUBMITTAL.

C BAT RACK INSTALLATION

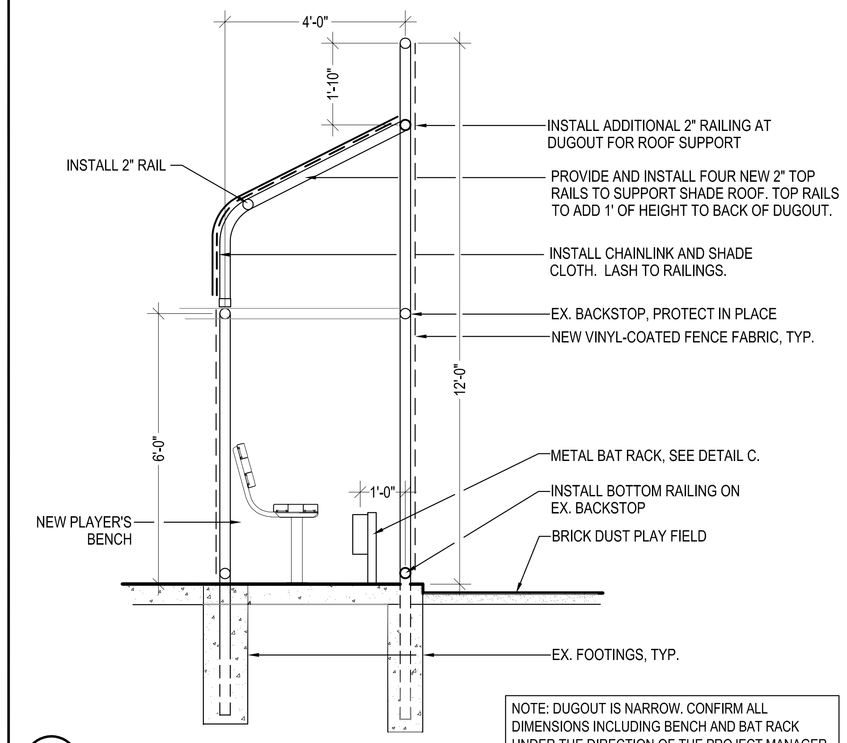

NOTE: DUGOUT IS NARROW. CONFIRM ALL DIMENSIONS INCLUDING BENCH AND BAT RACK UNDER THE DIRECTION OF THE PROJECT MANAGER. DO NOT INSTALL WITHOUT CONFIRMATION.

A DUGOUT SECTION

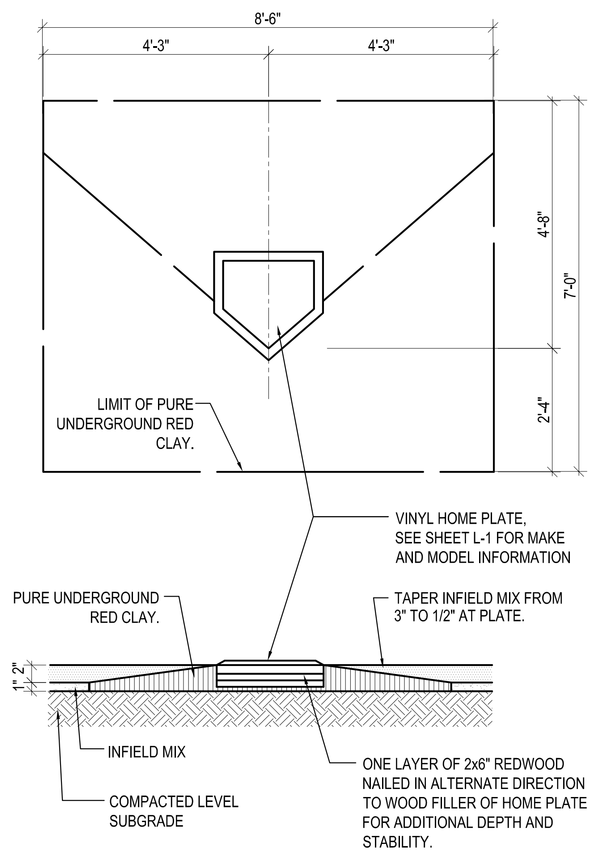

F HOME PLATE INSTALLATION

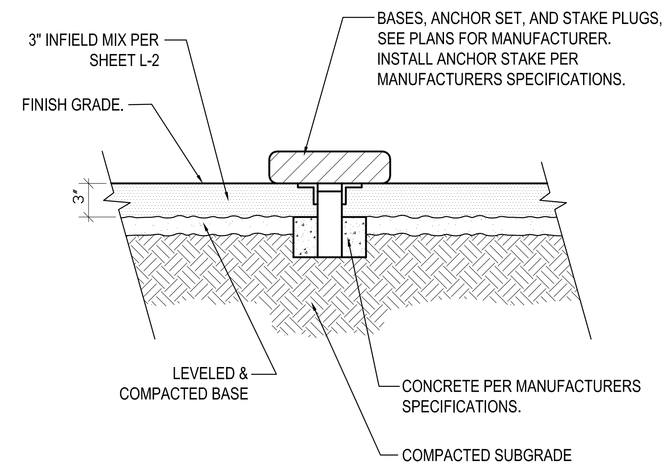

D INFIELD BASE INSTALLATION

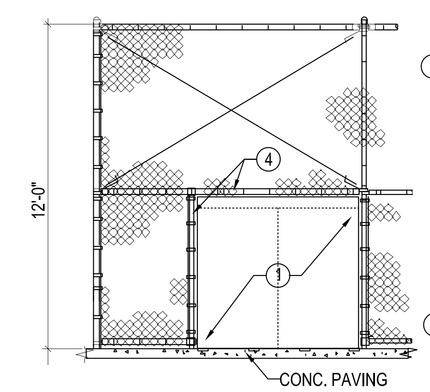

NOTES:

1. INSTALL INFIELD STORAGE BOX. MODEL #7256 CAPITAL ENTERPRISES (626) 357-3768 OR EQUAL. COLOR: GREEN. INCLUDE ESCAPE LATCH LOCKING DEVICE.
2. STORAGE BOX SHALL BE INSTALLED PER THE MANUFACTURER'S RECOMMENDATION. THE FRONT OF THE BOX SHALL OPEN TOWARDS THE OUTFIELD AND SHALL BE FLUSH WITH THE FENCE.
3. LOCATE STORAGE BOX ADJACENT TO THE LINE POST. ALL FENCE FABRIC SHALL BE INSTALLED AS TIGHTLY TO THE BOX AS POSSIBLE.
4. INSTALL ADDITIONAL POST, RAIL, STRETCHER BAR, TENSION BANDS, AND TIE WIRES AS NECESSARY.

B STORAGE BOX INSTALLATION

NOTE: FOUNTAIN SHOWN ROTATED 90° FOR CLARITY

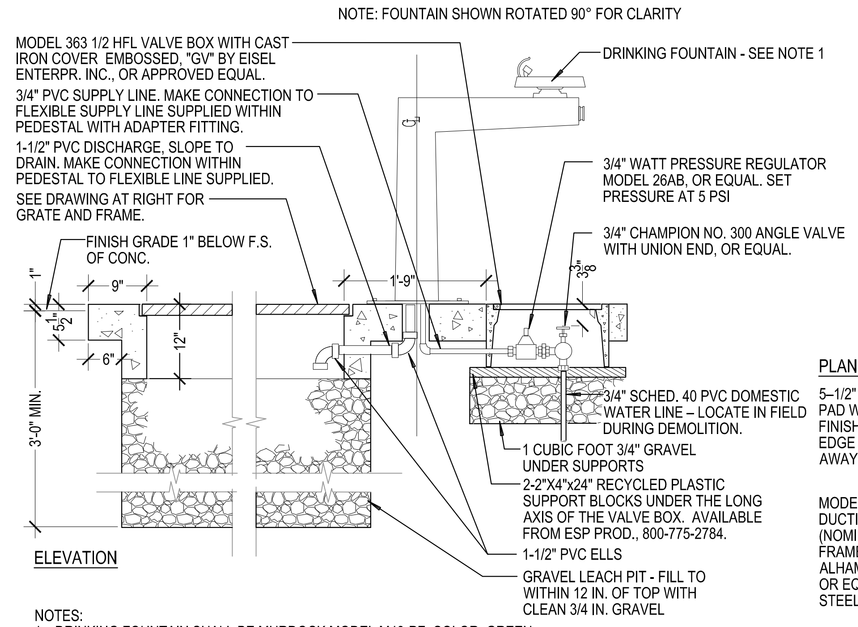

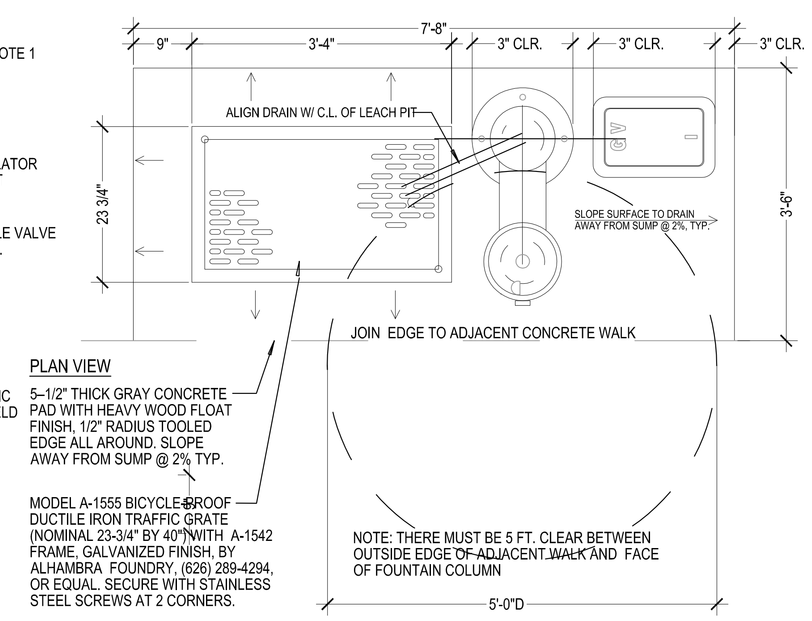

NOTES:

1. DRINKING FOUNTAIN SHALL BE MURDOCK MODEL M43-PF, COLOR: GREEN. MAKE PLUMBING CONNECTIONS PER MANUFACTURERS INSTRUCTIONS.
2. ATTACH FOUNTAIN TO CONCRETE WITH 4 – 1/2 IN. X 4 IN. LONG WEDGE TYPE EXPANSIONS BOLTS OR PER MANUFACTRERS INSTRUCTIONS.
3. BOTTOM OF SUMP MUST EXTEND TO SANDY/GRAVEL SOIL HORIZON. DO NOT END IN CLAY SOIL.

DOMESTIC LINE STERILIZATION PROCEDURE:
FLUSH DOMESTIC WATER LINES COMPLETELY. INJECT CHLORINE GAS OR LIQUID DISINFECTANT INTO LINE THROUGH A 3/4 INCH SERVICE COCK USING A PROPORTIONING PUMP AT A POINT AS CLOSE AS IS PRACTICAL TO THE WATER METER. OPEN BUBBLERS ON ALL UNITS INSTALLED SUFFICIENTLY TO DISTRIBUTE DISINFECTANT THROUGHOUT SYSTEM, SO THAT A MINIMUM CONCENTRATION OF 50 PPM, AS VERIFIED BY TEST, IS MEASURED AT ALL UNITS. DISINFECTANT SHALL REMAIN IN SYSTEM FOR 24 HOURS MIN. AT CONCLUSION, RESIDUAL RETENTION OF DISINFECTANT SHALL NOT BE LESS THAN 10 PPM. ALL LINES SHALL BE FLUSHED THOROUGHLY. A WATER SAMPLE SHALL BE TESTED BY AN APPROVED TESTING LABORATORY. RESULTS SHALL SHOW:

- COLIFORM-AEROGENES ORGANISMS: NEGATIVE
- TOTAL BACTERIA PLATE COUNT: LESS THAN 100/CUBIC CENTIMETER
- WATER POTABILITY: SAFE TO USE. IF NOT, STERILIZATION SHALL BE REPEATED UNTIL STANDARD IS MET.

E DRINKING FOUNTAIN

REVIEW BY STAFF	BY	DATE
TRAFFIC		
WATER		
SEWER		
PLANNING		

APPROVED BY

RAY HOLLAND
INTERIM DIRECTOR OF PUBLIC WORKS
CITY OF RANCHO PALOS VERDES
DATE _____

Withers & Sandgren Landscape Architecture

WITHERS & SANDGREN
LANDSCAPE ARCHITECTURE
& PLANNING

P.O. BOX 276
MONTROSE, CA 91021-0276
(818) 291-0200
(818) 882-8394 Fax

DELIVERIES
20948 TULSA STREET
CHATSWORTH, CA 91311
mail@withersandsandgren.com

SHEET TITLE
CONSTRUCTION DETAILS

PROJECT TITLE
ROBERT E. RYAN PARK
FIELD IMPROVEMENTS
HAWTHORNE BLVD.
RANCHO PALOS VERDES, CA

REVISIONS	DATE
1.	
2.	
3.	
4.	
5.	
6.	
7.	
8.	

DRAWN BY:	DH/PBN
CHECKED BY:	LW
PROJECT NO.	0808
DATE:	12/06/2010

LICENSED LANDSCAPE ARCHITECT
JOEL E. WITHERS 3337
Signature
8/31/2011
Renewal Date
12/06/2010
Date
STATE OF CALIFORNIA

L-2