# Appendix E

*Hydrology Data*

# Crestridge Project
# Drainage Study
## City of Rancho Palos, Los Angeles County, California

*Prepared for*
Trumark Homes
9911 Irvine Center Drive
Suite 150
Irvine, CA 92618

*Prepared by*
RBF Consulting
14725 Alton Parkway
Irvine, CA 92618

*Contact Persons*
Mujahid Chandoo, PE 76633
Rebecca Kinney, PE 58797

February 2012
RBF JN 10-108226

This page intentionally left blank.

# Table of Contents

**1 INTRODUCTION ..... 1**

1.1 Background and History ..... 1
1.2 Regulatory Setting ..... 1

**2 EXISTING CONDITIONS ..... 4**

2.1 Existing Conditions Description ..... 4
2.2 Hydrology and Drainage ..... 4
2.3 Floodplain Mapping ..... 6

**3 PROPOSED PROJECT ..... 7**

3.1 Proposed Project Description ..... 7
3.2 Hydrology and Drainage ..... 8
3.3 Floodplain Mapping ..... 10

**4 IMPACTS ..... 11**

4.1 Hydrology and Drainage ..... 11
4.2 Floodplain Mapping ..... 11

**5 CONCLUSION ..... 12**

**6 REFERENCES ..... 13**

## Tables

Table 1: Existing 25- and 50-year Flowrates ..... 6
Table 2: Proposed 25- and 50-year Flowrates ..... 10
Table 3: Unmitigated Flowrate Comparison Table ..... 11

## Exhibits

Exhibit 1: Regional Vicinity Map ..... 2
Exhibit 2: Local Vicinity Map ..... 3
Exhibit 3: Existing Condition Hydrology Map ..... 5
Exhibit 4: Proposed Condition Hydrology Map ..... 9

## Appendices

Appendix A: Existing Condition Hydrology
Appendix B: Proposed Condition Hydrology

# 1 INTRODUCTION

The following study is the Drainage Study prepared as part of the Trumark Crestridge project. The proposed site is located within the City of Rancho Palos Verdes (City), in Los Angeles County; **see Exhibit 1 –Regional Vicinity Map**. The project involves a 9.7-acre site, which currently consists of open space hillside lot. The project site is located northwest of the intersection of Crestridge Road and Crenshaw Boulevard in the City; **see Exhibit 2 – Local Vicinity Map**.

## 1.1 Background and History

Currently, the existing site is open space with sloping hillside and is traversed by various dirt paths. The 9.7-acre parcel is privately owned. Surrounding land uses include retail and office to the north, institutional and single-family residential to the south, single-family residential to the east, and institutional to the west. There are existing catch basins at the corner of Crenshaw Boulevard and Crestridge Drive.

## 1.2 Regulatory Setting

This section discusses the Federal, State, and local drainage policies and requirements applicable to the project site.

### Federal Level

The National Flood Insurance Program (NFIP) was created by Congress in 1968. It provided a means for property owners to financially protect themselves from flood damage. The NFIP offers flood insurance to homeowners, renters and business owners if their community participates in the program. Participating communities agree to adopt and enforce ordinances that meet or exceed FEMA requirements to reduce the risk of flooding. The City of Rancho Palos Verdes is a participating community and must adhere to the NFIP.

### Local Level

The local flood control regulations for the City of Rancho Palos Verdes can be found in the Municipal Code Chapter 13.08 and 13.10 dated 1981.

* - Project Area

NOT TO SCALE

RBF CONSULTING

02/12 • JN 10-108226

TRUMARK CRESTRIDGE PROJECT

# Regional Vicinity

Exhibit 1

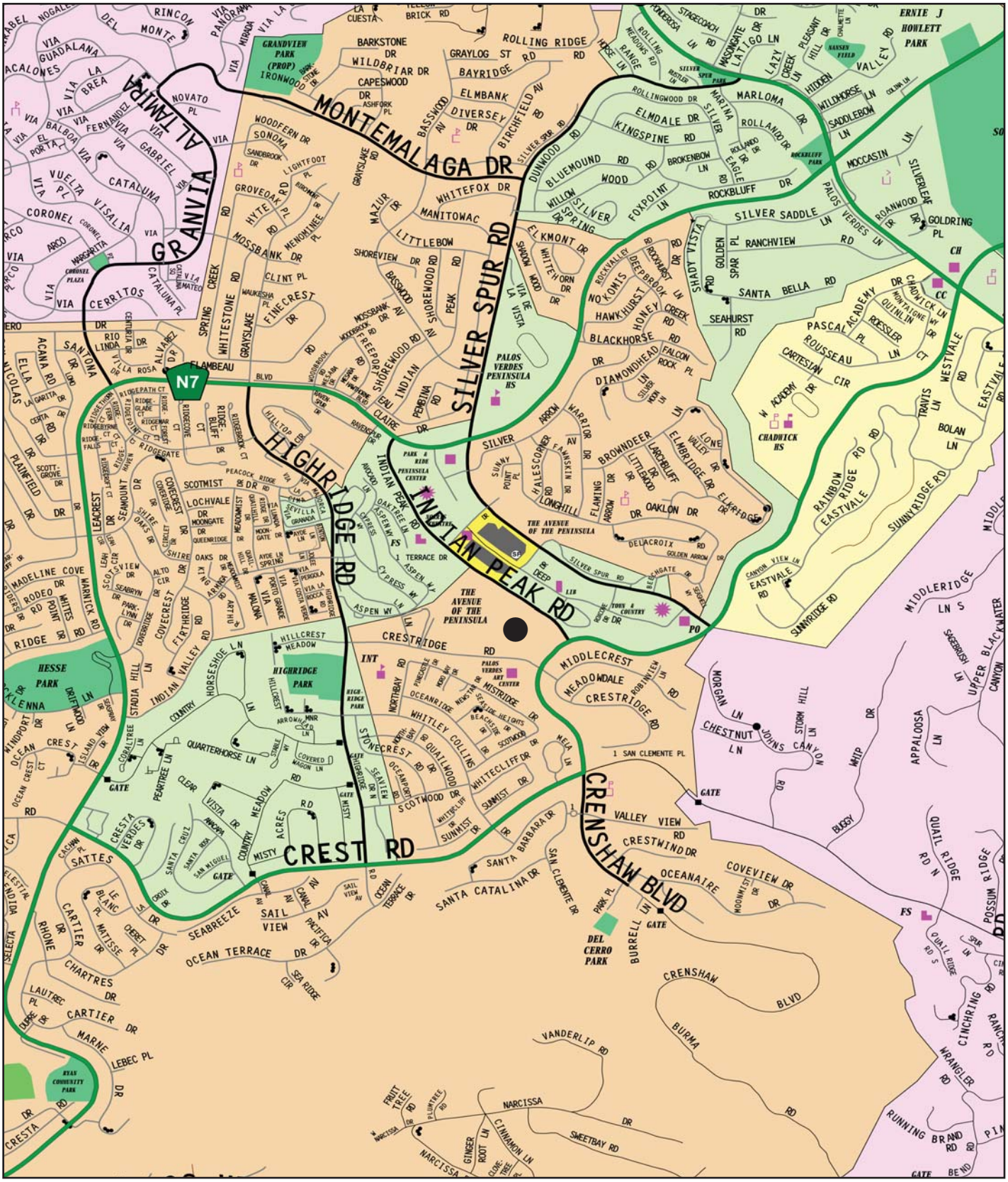


Source: The Thomas Brothers Guide, Los Angeles/Orange County, 2005.

● - Project Site

NOT TO SCALE

RBF CONSULTING

02/12 • JN 10-108226

TRUMARK CRESTRIDGE PROJECT

# Project Vicinity

**Exhibit 2**

# 2 EXISTING CONDITIONS

The following sub-sections discuss the existing condition analysis. The purpose of this existing conditions evaluation is to establish a baseline for comparison of the pre-project and the post-project conditions and impact analysis, which is included in Section 4. Baseline conditions investigated include: land use, hydrology, and floodplain mapping.

## 2.1 Existing Conditions Description

The 9.7-acre Crestridge site is bounded by Indian Peak road to the north, Crenshaw Boulevard to the east, Crestridge road to the south, and the Highridge road to the west. The City of Rancho Palos Verdes currently designates the site as Institutional. Surrounding land uses include retail and office to the north, institutional and single-family residential to the south, single-family residential to the east, and institutional to the west. The majority of the site is currently open space. **See Exhibit 3 – Existing Condition Hydrology Map.**

## 2.2 Hydrology and Drainage

The local existing conditions hydrology analysis of the site shows that there are two main watersheds. The historic drainage patterns for the areas follow north down the natural slope to Indian Peak Road, south to existing catch basins onto Crestridge road and northeast towards Crenshaw Boulevard.

The maximum elevation differential of the watershed is approximately 150 feet (from elevation 1200 ft at the northwest boundary to 1050 ft at Crenshaw Boulevard and Indian Peak road intersection). The site is approximately at a one percent slope. The project was split into two areas, one that drains to the Crestridge Storm Drain (Watershed A) and Watershed B, which drains via the natural slope to Indian Peak Road. Based on the City of Rancho Palos Verdes Master Plan of Drainage there is an existing 30" RCP on Crestridge Drive. The Master Plan has identified the facility as being deficient.

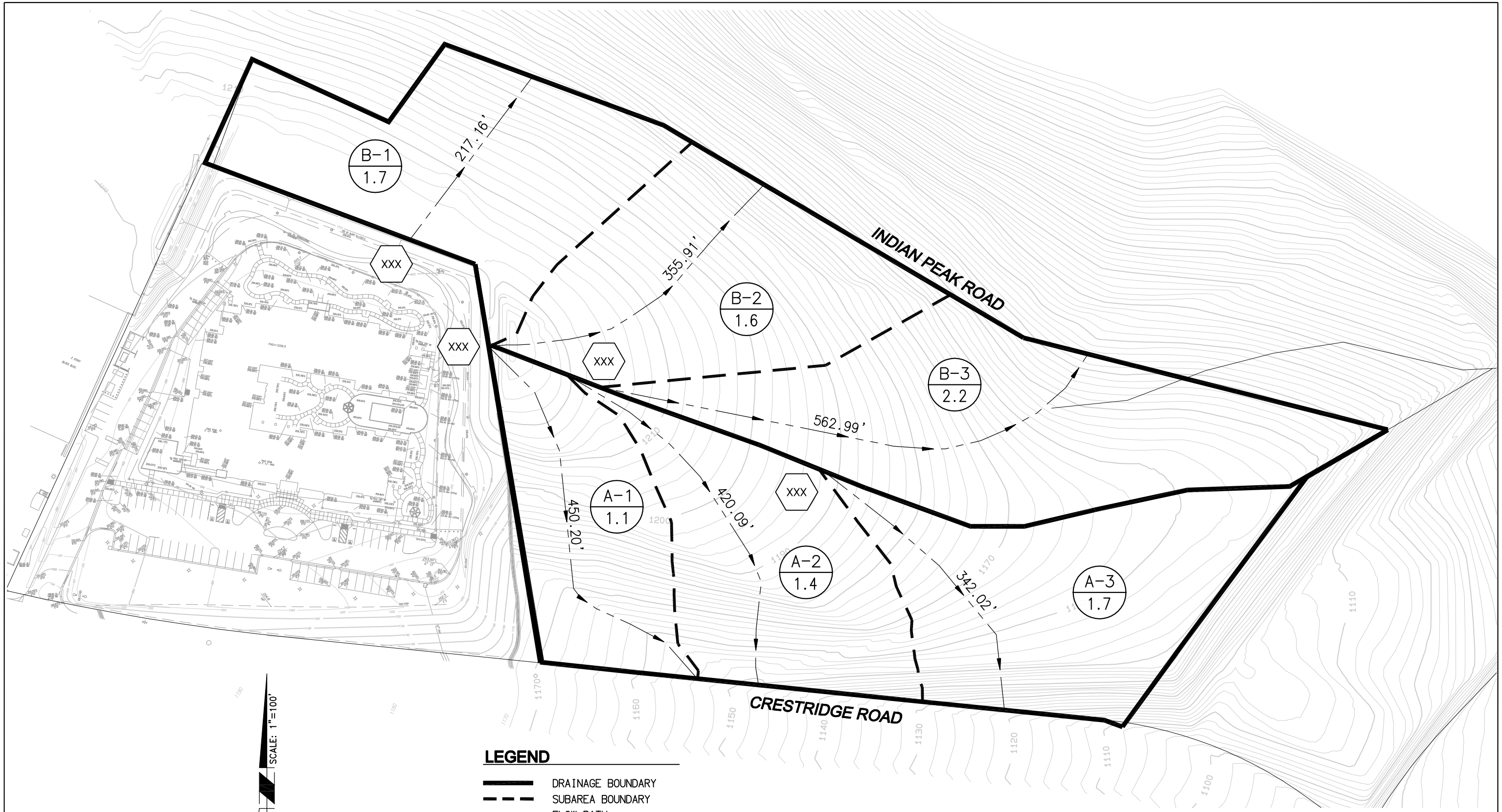


## LEGEND

- DRAINAGE BOUNDARY
- SUBAREA BOUNDARY
- FLOW PATH
- A-1 / 1.1 — SUBAREA DESIGNATION / AREA (ACRES)
- 100 — HYDROLOGY NODE

RBF
A Baker Company

# EXHIBIT 3
# TRUMARK - RPV
# EXISTING CONDITION HYDROLOGY MAP

H:\PDATA\10108226\TRUMARK RPV\CADD\STRMWATER\EXHIBITS\EXISTING HYDRO MAP.DWG EMILYCHEN 2/17/12 9:01 am

#### 2.2.1.1 Methodology

The Rational Method is an empirical computation procedure used to develop a peak runoff rate (discharge) for storms of a specific recurrence interval. Rational Method equations are based on the assumption that the peak flowrate is directly proportional to the drainage area, rainfall intensity, and a loss coefficient, which describes the effects of land use and soil type. The design discharges were computed by generating a hydrologic "link-node" model, which divides the area into drainage subareas. These subareas are tributary to a concentration point or hydrologic "node" point determined by the existing terrain and street layout. The following assumptions/guidelines were applied for use of the Rational Methods:

1. The Rational Method hydrology includes the effects of infiltration caused by soil surface characteristics. The soils map from the Los Angeles County Manual indicates that the study area consists of soil types “004”.

2. The infiltration rate is also affected by the type of vegetation or ground cover and percentage of impervious surfaces. The amount of imperviousness used for the existing condition was 10% rural undeveloped area.

3. The time of concentration (Tc) is determined utilizing the Los Angeles County Hydrology Manual procedures.

4. Standard Intensity-Duration Curve data was based on the area being within the “K” rainfall zone per Los Angeles County Hydrology Manual. The 25-year and 50-year storms were analyzed.

#### 2.2.1.2 Results

**Table 1: Existing 25- and 50-year Flowrates**

| Watershed | Area, Ac | 25-year Flowrate (cfs) | 50-Year Flowrate (cfs) |
|---|---|---|---|
| A | 4.2 | 6.9 | 8.6 |
| B (Natural Slope) | 5.5 | 9.6 | 11.6 |

## 2.3 Floodplain Mapping

Communities participating in the NFIP must adopt and enforce minimum floodplain management standards, including identification of flood hazards and flooding risks. Participation in the NFIP allows communities to purchase low cost insurance protection against losses from flooding. There are no published Flood Insurance Rate Maps (FIRMs) for the project site. The project is located in unmapped Panel No. 060464.

# 3 PROPOSED PROJECT

The following sub-sections discuss the proposed condition analysis. The proposed condition analysis is used, in conjunction with the existing condition analysis, to determine impacts associated with development of the property. Post-project conditions investigated include land use, assumed storm drain configuration, hydrology, and floodplain mapping.

## 3.1 Proposed Project Description

The proposed Crestridge project is an infill senior restricted (55+ years of age or older) for-sale residential community proposed by Trumark Companies to fill the existing and exponentially growing need for high-quality, low maintenance and conveniently located housing that the baby boomer generation will demand. The proposed 9.7 acre plan proposes 60 residences at a density of 6.7 homes per acre. The proposed townhome style and single-level living stacked flat residences have 2 bedrooms in 4 different floor plans that range from approximately 1,800 square feet to 2,100 square feet. The homes are two stories with 2 to 5 residences per structure.

The Crestridge community has been designed with reverence for the alluring views that the site offers. A trail system encircles the site, providing access from each of the residences to the many view locations, the community recreation area, as well as the community service center. One of the more prominent view locations at the western edge of the site is left undeveloped on the proposed site plan. Only a low-impact trail will access this area so residents can take in the views of the coastline and the Los Angeles basin.

The community trail will also access the more than 13,000 square-foot community recreation area located at the northeast corner of the site. This area has been selected for the recreation amenity to give all of the residents of the Crestridge community an opportunity to enjoy the views afforded by the site, not just the few that would live in homes that could be built in this area instead of the recreational feature. The amenities proposed for this area include a bocce ball court, two shuffleball courts, a community conversation and gathering stage with fire pit and seating area, outdoor living room and restrooms.

The approximately 2,400 square-foot Community Service Center building and sundeck will provide a second, centralized community amenity for the residents. Not only will the Community Service Center provide physical comforts like a large recreation and lounge area for community gatherings, computer center/business room, office, fitness room, bathrooms, outdoor fireplace and living room, spa, barbeque and seating area, but the Community Service Center will also play an important community gathering and social venue for regular resident activities like movie nights, book clubs and cooking classes.

The Crestridge community will have a gated access off of Crestridge Road. Once inside the community, internal private streets are designed to be a minimum of 26 feet wide. No parallel parking is allowed on the streets. Thirty perpendicular parking spaces are distributed throughout the site for guests

To enhance water quality on the site, Filterra water quality devices or similar devices will be placed at the proposed catch basins. Throughout the project, drought-tolerant landscaping is proposed which will limit irrigation runoff during the dry season.

## 3.2 Hydrology and Drainage

The local proposed conditions hydrology analysis of the site shows that there are two main watersheds onsite. The proposed development generally flows from northwest to southeast, at the northwest corner of the development and terminating at the southeast corner. The open space area along the northern portion of the site will remain natural. Since several of the buildings are contoured to the slope, small diameter storm drains will capture runoff from the areas that do not drain to internal street. There will be storm drain constructed from the entry way to the sump low point at the southeast corner of the property. The sump area will have multiple catch basins and the storm drain will be design to convey the 30-year runoff. **See Exhibit 4 – Proposed Condition Hydrology Map.**

### 3.2.1.1 Methodology

The hydrologic calculations to determine the 25-year and 50-year peak flow rates were performed using the Los Angeles County Hydrology Manual. The Rational Method is an empirical computation procedure for developing a peak runoff rate (discharge) for storms of a specific recurrence interval. Rational Method equations are based on the assumption that the peak flowrate is directly proportional to the drainage area, rainfall intensity, and a loss coefficient, which describes the effects of land use and soil type. The design discharges were computed by generating a hydrologic "link-node" model, which divides the area into drainage subareas. These subareas are tributary to a concentration point or hydrologic "node" point determined by the existing terrain and street layout. The following assumptions/guidelines were applied for use of the Rational Method:

1. The Rational Method hydrology includes the effects of infiltration caused by soil surface characteristics. The soils map from the Los Angeles County Hydrology Manual indicates that the study area consists of soil types "004."

2. The infiltration rate is also affected by the type of vegetation or ground cover and percentage of impervious surfaces. The proposed project is Homes for the elderly with a proportion impervious value of 55%.

3. The onsite flows are conveyed in an assumed storm drain and street flow systems.

4. Standard Intensity-Duration Curve data was obtained from the Los Angeles County Hydrology Manual.

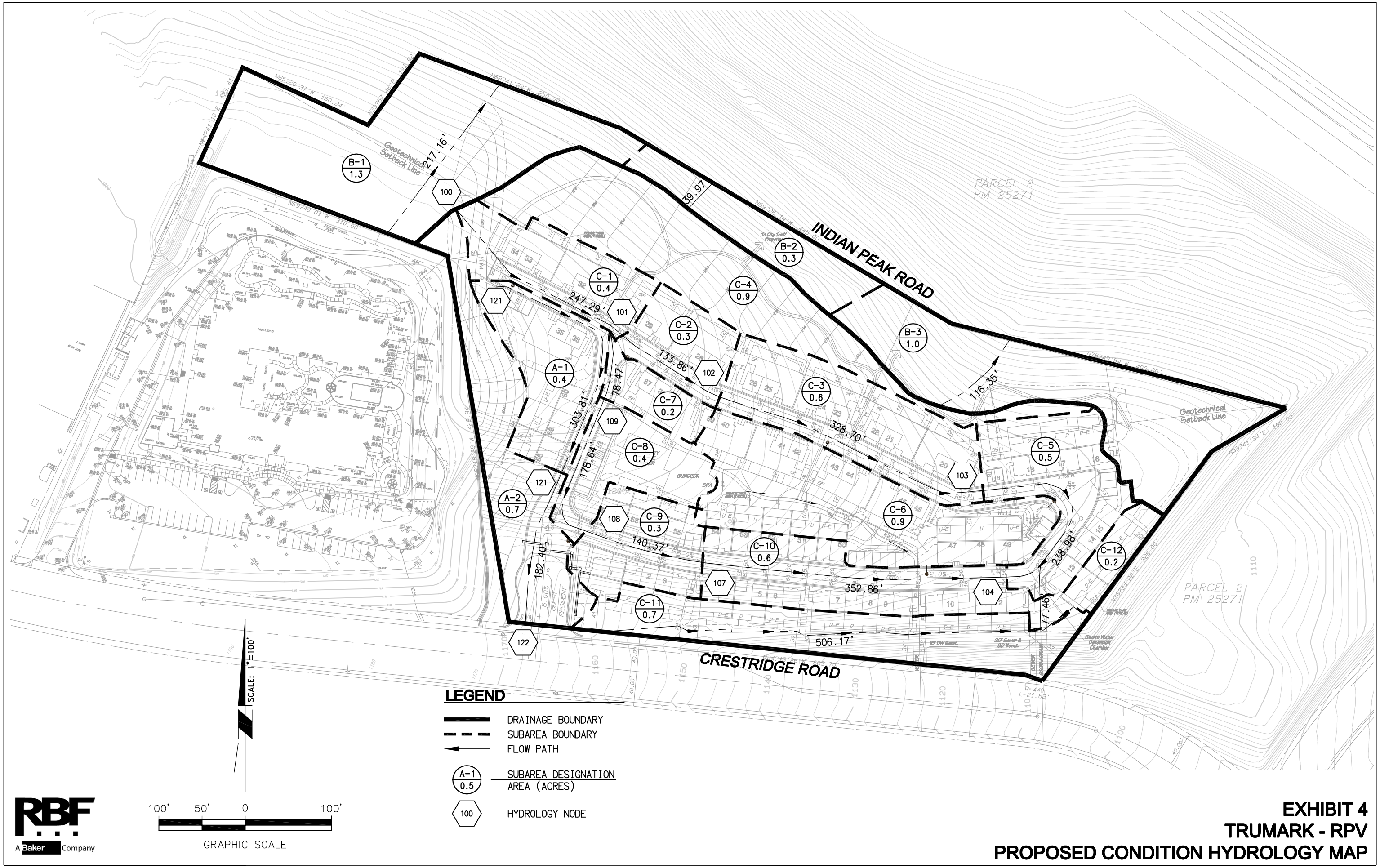


## LEGEND

- DRAINAGE BOUNDARY
- SUBAREA BOUNDARY
- FLOW PATH
- A-1 / 0.5 — SUBAREA DESIGNATION / AREA (ACRES)
- 100 — HYDROLOGY NODE

# EXHIBIT 4
# TRUMARK - RPV
# PROPOSED CONDITION HYDROLOGY MAP

H:\PDATA\10108226\TRUMARK RPV\CADD\STRMWATER\EXHIBITS\PROPOSED CONDITION HYDROLOGY.DWG EMILYCHEN 2/17/12 9:02 am

#### 3.2.1.2 Results

**Table 2: Proposed 25- and 50-year Flowrates**

| Watershed | Area (Ac) | 25-year Flowrate (cfs) | 50-Year Flowrate (cfs) |
|---|---|---|---|
| A/C | 7.1 | 11.6 | 13.7 |
| B (Natural Slope) | 2.6 | 4.9 | 5.7 |

### 3.3 Floodplain Mapping

Since the project is not in a mapped floodplain, the proposed development will not impact any existing floodplains.

# 4 IMPACTS

The following sub-sections discuss the potential impacts due to the development of the proposed project. The impacts are divided into two sub-sections: hydrology and drainage impacts, and floodplain mapping.

## 4.1 Hydrology and Drainage

The following table provides a comparison of the existing and unmitigated proposed hydrology for the 25- and 50-year storm events.

**Table 3: Unmitigated Flowrate Comparison Table**

| Tributary To | Area (Acres) | | | 25-year Flow (cfs) | | | 50-year Flow (cfs) | | |
|---|---|---|---|---|---|---|---|---|---|
| | Existing | Proposed | Δ | Existing | Proposed | Δ | Existing | Proposed | Δ |
| Watershed A/C Crenshaw Storm Drain | 4.2 | 7.1 | +2.9 | 6.9 | 11.6 | +4.7 | 8.6 | 13.7 | +5.1 |
| Watershed B Natural Slope Indian Peak Road | 5.5 | 2.6 | -2.9 | 9.6 | 4.9 | -4.7 | 11.6 | 5.7 | -5.9 |

Due to the change in drainage area tributary to the Crenshaw storm drain (Watershed A/C), onsite detention is required. Preliminary engineering estimates indicate that the proposed condition flowrate tributary to the Crenshaw storm drain can be reduced to the existing flowrates (6.8 cfs for the 25-year storm and 7.9 cfs for the 50-year storm) by constructing an underground detention basin within the development street right-of-way. For preliminary estimates, the layout in Exhibit 4 shows at 8' wide by 5' high Reinforced Concrete box that is approximately 385 feet long with a 12-inch outlet. Final proposed flowrates (after the detention basins) are 6.8 cfs for the 25-year and 7.9 cfs for the 100-year (See Appendix B).

Onsite storm drains range from 18 to 24 inches.

## 4.2 Floodplain Mapping

The proposed site improvements are located in Zone X and will not impact the 1-percent-annual-chance flood plain.

# 5 CONCLUSION

The resulting flowrates for the proposed condition is similar to the existing condition due to onsite underground detention. Onsite facilities will be size in accordance with City of Rancho Palos Verdes Standards.

# 6 REFERENCES

County of Los Angeles. *Los Angeles County Hydrology Manual*. 2006.

National Flood Insurance Program: The official site of the NFIP, http://www.floodsmart.gov, February 14, 2012.

# Appendix A: Existing Condition Hydrology

File name: C:\WMS80\Trumark RPV\Existing\25-yr\Watershed A\RPV25_E_A.lac Run date: Wed Feb 08 10:35:08 2012

Los Angeles County Flood Control District
Modified Rational Method Hydrology

Storm Frequency 25

| LOCATION | | SUBAREA AREA | SUBAREA Q | TOTAL AREA | TOTAL Q | TOTAL VOLUME | CONV TYPE | CONV LNGTH | CONV SLOPE | CONV SIZE | CONV Z | CONTROL Q | SOIL NAME | TC | RAIN | PCT IMPV |
|---|---|---|---|---|---|---|---|---|---|---|---|---|---|---|---|---|
| 1 | 1A | 1.1 | 1.85 | 1.1 | 1.85 | 0.091 | 0 | 0 | 0.00000 | 0.00 | 0.00 | 0 | 4 | 6 | 4.30 | 0.10 |
| 1 | 2A | 0.0 | 0.00 | 1.1 | 1.85 | 0.033 | 3 | 66 | 0.08900 | 30-6 | 0.00 | 0 | 4 | 0 | 4.30 | 0.00 |
| 1 | 3A | 1.4 | 2.36 | 2.5 | 4.16 | 0.150 | 0 | 0 | 0.00000 | 0.00 | 0.00 | 0 | 4 | 6 | 4.30 | 0.10 |
| 1 | 4A | 0.0 | 0.00 | 2.5 | 4.16 | 0.078 | 3 | 263 | 0.09900 | 30-6 | 0.00 | 0 | 4 | 0 | 4.30 | 0.00 |
| 1 | 5A | 1.7 | 3.19 | 4.2 | 6.89 | 0.219 | 0 | 0 | 0.00000 | 0.00 | 0.00 | 0 | 4 | 5 | 4.30 | 0.10 |
| 1 | 6A | 0.0 | 0.00 | 4.2 | 6.89 | 0.219 | 0 | 0 | 0.00000 | 0.00 | 0.00 | 0 | 4 | 0 | 4.30 | 0.00 |

Normal End of MODRAT

File name: C:\WMS80\Trumark RPV\Existing\25-yr\Watershed B\RPV25_E_B.lac Run date: Wed Feb 08 10:37:02 2012

Los Angeles County Flood Control District
Modified Rational Method Hydrology

Storm Frequency 25

| LOCATION | | SUBAREA AREA | SUBAREA Q | TOTAL AREA | TOTAL Q | TOTAL VOLUME | CONV TYPE | CONV LNGTH | CONV SLOPE | CONV SIZE | CONV Z | CONTROL Q | SOIL NAME | TC | RAIN | PCT IMPV |
|---|---|---|---|---|---|---|---|---|---|---|---|---|---|---|---|---|
| 1 | 1A | 2.2 | 3.38 | 2.2 | 3.38 | 0.183 | 0 | 0 | 0.00000 | 0.00 | 0.00 | 0 | 4 | 7 | 4.30 | 0.10 |
| 1 | 2A | 1.6 | 3.00 | 3.8 | 6.38 | 0.316 | 0 | 0 | 0.00000 | 0.00 | 0.00 | 0 | 4 | 5 | 4.30 | 0.10 |
| 1 | 3A | 1.7 | 3.19 | 5.5 | 9.56 | 0.457 | 0 | 0 | 0.00000 | 0.00 | 0.00 | 0 | 4 | 5 | 4.30 | 0.10 |
| 1 | 4A | 0.0 | 0.00 | 5.5 | 9.56 | 0.457 | 0 | 0 | 0.00000 | 0.00 | 0.00 | 0 | 4 | 0 | 4.30 | 0.00 |

Normal End of MODRAT

File name: C:\WMS80\Trumark RPV\Existing\50-yr\Watershed A\RPV50_E_A.lac Run date: Wed Feb 08 10:38:44 2012

Los Angeles County Flood Control District
Modified Rational Method Hydrology

Storm Day 4 Storm Frequency 50

| LOCATION | | SUBAREA AREA | SUBAREA Q | TOTAL AREA | TOTAL Q | TOTAL VOLUME | CONV TYPE | CONV LNGTH | CONV SLOPE | CONV SIZE | CONV Z | CONTROL Q | SOIL NAME | TC | RAIN | PCT IMPV |
|---|---|---|---|---|---|---|---|---|---|---|---|---|---|---|---|---|
| 1 | 1A | 1.1 | 2.40 | 1.1 | 2.40 | 0.108 | 0 | 0 | 0.00000 | 0.00 | 0.00 | 0 | 4 | 5 | 4.90 | 0.10 |
| 1 | 2A | 0.0 | 0.00 | 1.1 | 2.40 | 0.044 | 3 | 66 | 0.08900 | 30-6 | 0.00 | 0 | 4 | 0 | 4.90 | 0.00 |
| 1 | 3A | 1.4 | 3.06 | 2.5 | 5.35 | 0.182 | 0 | 0 | 0.00000 | 0.00 | 0.00 | 0 | 4 | 5 | 4.90 | 0.10 |
| 1 | 4A | 0.0 | 0.00 | 2.5 | 5.35 | 0.103 | 3 | 263 | 0.09900 | 30-6 | 0.00 | 0 | 4 | 0 | 4.90 | 0.00 |
| 1 | 5A | 1.7 | 3.71 | 4.2 | 8.55 | 0.270 | 0 | 0 | 0.00000 | 0.00 | 0.00 | 0 | 4 | 5 | 4.90 | 0.10 |
| 1 | 6A | 0.0 | 0.00 | 4.2 | 8.55 | 0.270 | 0 | 0 | 0.00000 | 0.00 | 0.00 | 0 | 4 | 0 | 4.90 | 0.00 |

Normal End of MODRAT

File name: C:\WMS80\Trumark RPV\Existing\50-yr\Watershed B\RPV50_E_B.lac Run date: Wed Feb 08 10:43:09 2012

Los Angeles County Flood Control District
Modified Rational Method Hydrology

Storm Frequency 50

| LOCATION | | SUBAREA AREA | SUBAREA Q | TOTAL AREA | TOTAL Q | TOTAL VOLUME | CONV TYPE | CONV LNGTH | CONV SLOPE | CONV SIZE | CONV Z | CONTROL Q | SOIL NAME | TC | RAIN | PCT IMPV |
|---|---|---|---|---|---|---|---|---|---|---|---|---|---|---|---|---|
| 1 | 1A | 2.2 | 4.34 | 2.2 | 4.34 | 0.216 | 0 | 0 | 0.00000 | 0.00 | 0.00 | 0 | 4 | 6 | 4.90 | 0.10 |
| 1 | 2A | 1.6 | 3.49 | 3.8 | 7.83 | 0.374 | 0 | 0 | 0.00000 | 0.00 | 0.00 | 0 | 4 | 5 | 4.90 | 0.10 |
| 1 | 3A | 1.7 | 3.71 | 5.5 | 11.55 | 0.541 | 0 | 0 | 0.00000 | 0.00 | 0.00 | 0 | 4 | 5 | 4.90 | 0.10 |
| 1 | 4A | 0.0 | 0.00 | 5.5 | 11.55 | 0.541 | 0 | 0 | 0.00000 | 0.00 | 0.00 | 0 | 4 | 0 | 4.90 | 0.00 |

Normal End of MODRAT

# Appendix B: Proposed Condition Hydrology

File name: C:\WMS80\Trumark RPV\Proposed\25-yr\Watershed A\RPV25_P_A.lac Run date: Thu Feb 16 17:25:55 2012

Los Angeles County Flood Control District
Modified Rational Method Hydrology

Storm Frequency 25

| LOCATION | | SUBAREA AREA | SUBAREA Q | TOTAL AREA | TOTAL Q | TOTAL VOLUME | CONV TYPE | CONV LNGTH | CONV SLOPE | CONV SIZE | CONV Z | CONTROL Q | SOIL NAME | TC | RAIN | PCT IMPV |
|---|---|---|---|---|---|---|---|---|---|---|---|---|---|---|---|---|
| 1 | 1A | 0.4 | 0.84 | 0.4 | 0.84 | 0.080 | 0 | 0 | 0.00000 | 0.00 | 0.00 | 0 | 4 | 5 | 4.30 | 0.55 |
| 1 | 2A | 0.0 | 0.00 | 0.4 | 0.84 | 0.017 | 3 | 182 | 0.03300 | 30-6 | 0.00 | 0 | 4 | 0 | 4.30 | 0.00 |
| 1 | 3A | 0.7 | 1.08 | 1.1 | 1.84 | 0.075 | 0 | 0 | 0.00000 | 0.00 | 0.00 | 0 | 4 | 7 | 4.30 | 0.10 |
| 1 | 4A | 0.0 | 0.00 | 1.1 | 1.84 | 0.075 | 0 | 0 | 0.00000 | 0.00 | 0.00 | 0 | 4 | 0 | 4.30 | 0.00 |

Normal End of MODRAT

File name: C:\WMS80\Trumark RPV\Proposed\25-yr\Watershed B\RPV25_P_B.lac Run date: Wed Feb 08 10:52:25 2012

Los Angeles County Flood Control District
Modified Rational Method Hydrology

Storm Day 4 Storm Frequency 25

| LOCATION | | SUBAREA AREA | SUBAREA Q | TOTAL AREA | TOTAL Q | TOTAL VOLUME | CONV TYPE | CONV LNGTH | CONV SLOPE | CONV SIZE | CONV Z | CONTROL Q | SOIL NAME | TC | RAIN | PCT IMPV |
|---|---|---|---|---|---|---|---|---|---|---|---|---|---|---|---|---|
| 1 | 1A | 1.3 | 2.44 | 1.3 | 2.44 | 0.108 | 0 | 0 | 0.00000 | 0.00 | 0.00 | 0 | 4 | 5 | 4.30 | 0.10 |
| 1 | 2A | 0.3 | 0.56 | 1.6 | 3.00 | 0.133 | 0 | 0 | 0.00000 | 0.00 | 0.00 | 0 | 4 | 5 | 4.30 | 0.10 |
| 1 | 3A | 1.0 | 1.87 | 2.6 | 4.87 | 0.216 | 0 | 0 | 0.00000 | 0.00 | 0.00 | 0 | 4 | 5 | 4.30 | 0.10 |
| 1 | 4A | 0.0 | 0.00 | 2.6 | 4.87 | 0.216 | 0 | 0 | 0.00000 | 0.00 | 0.00 | 0 | 4 | 0 | 4.30 | 0.00 |

Normal End of MODRAT

| | | | | | | | | | | | | | | | | |
|---|---|---|---|---|---|---|---|---|---|---|---|---|---|---|---|---|
| 1 | 2A | 0.0 | 0.00 | 0.0 | 0.00 | 0.000 | 3 | 179 | 0.02000 | 30-6 | 0.00 | 0 | 2 | 0 | 0.75 | 0.00 |
| 1 | 4A | 0.0 | 0.00 | 0.0 | 0.00 | 0.000 | 3 | 140 | 0.02000 | 30-6 | 0.00 | 0 | 2 | 0 | 0.75 | 0.00 |
| 1 | 6A | 0.0 | 0.00 | 0.0 | 0.00 | 0.000 | 3 | 353 | 0.02000 | 30-6 | 0.00 | 0 | 2 | 0 | 0.75 | 0.00 |
| 1 | 7A | 0.9 | 1.88 | 0.9 | 1.88 | 0.181 | 0 | 0 | 0.00000 | 0.00 | 0.00 | 0 | 4 | 5 | 4.30 | 0.55 |
| 1 | 8A | 0.5 | 1.05 | 1.4 | 2.93 | 0.282 | 0 | 0 | 0.00000 | 0.00 | 0.00 | 0 | 4 | 5 | 4.30 | 0.55 |
| 1 | 13B | 0.4 | 0.84 | 0.4 | 0.84 | 0.081 | 0 | 0 | 0.00000 | 0.00 | 0.00 | 0 | 4 | 5 | 4.30 | 0.55 |
| 1 | 14B | 0.0 | 0.00 | 0.4 | 0.84 | 0.017 | 3 | 134 | 0.03000 | 30-6 | 0.00 | 0 | 4 | 0 | 4.30 | 0.00 |
| 1 | 15B | 0.3 | 0.63 | 0.7 | 1.39 | 0.077 | 0 | 0 | 0.00000 | 0.00 | 0.00 | 0 | 4 | 5 | 4.30 | 0.55 |
| 1 | 16B | 0.0 | 0.00 | 0.7 | 1.39 | 0.030 | 3 | 329 | 0.03000 | 30-6 | 0.00 | 0 | 4 | 0 | 4.30 | 0.00 |
| 1 | 17B | 0.9 | 1.39 | 1.6 | 2.50 | 0.211 | 0 | 0 | 0.00000 | 0.00 | 0.00 | 0 | 4 | 9 | 4.30 | 0.55 |
| 1 | 18B | 0.6 | 1.14 | 2.2 | 3.45 | 0.332 | 0 | 0 | 0.00000 | 0.00 | 0.00 | 0 | 4 | 6 | 4.30 | 0.55 |
| 1 | 19B | 0.0 | 0.00 | 2.2 | 3.45 | 0.258 | 3 | 239 | 0.03000 | 30-6 | 0.00 | 0 | 4 | 0 | 4.30 | 0.00 |
| 1 | 20B | 0.6 | 1.05 | 2.8 | 4.21 | 0.379 | 0 | 0 | 0.00000 | 0.00 | 0.00 | 0 | 4 | 7 | 4.30 | 0.55 |
| 1 | 21B | 0.3 | 0.63 | 3.1 | 4.62 | 0.440 | 0 | 0 | 0.00000 | 0.00 | 0.00 | 0 | 4 | 5 | 4.30 | 0.55 |
| 1 | 22B | 0.4 | 0.76 | 3.5 | 5.28 | 0.520 | 0 | 0 | 0.00000 | 0.00 | 0.00 | 0 | 4 | 6 | 4.30 | 0.55 |
| 1 | 23B | 0.2 | 0.42 | 3.7 | 5.61 | 0.560 | 0 | 0 | 0.00000 | 0.00 | 0.00 | 0 | 4 | 5 | 4.30 | 0.55 |

**********

*  CONFLUENCE Q'S  *

* 1 24A TA 1153 QA 2.93 QAB 7.83 QB 4.90 1 24B TB 1156 QB 5.61 QB 0.00 QùA 2.29 Q 1.#R

*  1 24AB TAB 1155 QAB 8.23 QA 2.65 QB 5.59

**********

| LOCATION | | SUBAREA AREA | SUBAREA Q | TOTAL AREA | TOTAL Q | TOTAL VOLUME | CONV TYPE | CONV LNGTH | CONV SLOPE | CONV SIZE | CONV Z | CONTROL Q | SOIL NAME | TC | RAIN | PCT IMPV |
|---|---|---|---|---|---|---|---|---|---|---|---|---|---|---|---|---|
| 1 | 24AB | 3.7 | 5.61 | 5.1 | 8.23 | 0.842 | 4 | 78 | 0.03000 | 2.00 | 0.00 | 0 | 4 | 0 | 4.30 | 0.00 |
| 1 | 25A | 0.2 | 0.42 | 5.3 | 8.61 | 0.882 | 0 | 0 | 0.00000 | 0.00 | 0.00 | 0 | 4 | 5 | 4.30 | 0.55 |
| 1 | 26A | 0.7 | 1.15 | 6.0 | 9.73 | 1.023 | 0 | 0 | 0.00000 | 0.00 | 0.00 | 0 | 4 | 8 | 4.30 | 0.55 |
| 1 | 27A | 0.0 | 0.00 | 6.0 | 9.73 | 1.023 | 0 | 0 | 0.00000 | 0.00 | 0.00 | 0 | 4 | 0 | 4.30 | 0.00 |

Normal End of MODRAT

File name: C:\WMS80\Trumark RPV\Proposed\50-yr\Watershed A\RPV_50_P_A.lac Run date: Thu Feb 16 17:27:22 2012

Los Angeles County Flood Control District
Modified Rational Method Hydrology

Storm Frequency 50

| LOCATION | | SUBAREA AREA | SUBAREA Q | TOTAL AREA | TOTAL Q | TOTAL VOLUME | CONV TYPE | CONV LNGTH | CONV SLOPE | CONV SIZE | CONV Z | CONTROL Q | SOIL NAME | TC | RAIN | PCT IMPV |
|---|---|---|---|---|---|---|---|---|---|---|---|---|---|---|---|---|
| 1 | 1A | 0.4 | 0.96 | 0.4 | 0.96 | 0.092 | 0 | 0 | 0.00000 | 0.00 | 0.00 | 0 | 4 | 5 | 4.90 | 0.55 |
| 1 | 2A | 0.0 | 0.00 | 0.4 | 0.96 | 0.023 | 3 | 182 | 0.03300 | 30-6 | 0.00 | 0 | 4 | 0 | 4.90 | 0.00 |
| 1 | 3A | 0.7 | 1.38 | 1.1 | 2.23 | 0.091 | 0 | 0 | 0.00000 | 0.00 | 0.00 | 0 | 4 | 6 | 4.90 | 0.10 |
| 1 | 4A | 0.0 | 0.00 | 1.1 | 2.23 | 0.091 | 0 | 0 | 0.00000 | 0.00 | 0.00 | 0 | 4 | 0 | 4.90 | 0.00 |

Normal End of MODRAT

File name: C:\WMS80\Trumark RPV\Proposed\50-yr\Watershed B\RPV50_P_B.lac Run date: Wed Feb 08 10:47:06 2012

Los Angeles County Flood Control District
Modified Rational Method Hydrology

Storm Day 4 Storm Frequency 50

| LOCATION | | SUBAREA AREA | SUBAREA Q | TOTAL AREA | TOTAL Q | TOTAL VOLUME | CONV TYPE | CONV LNGTH | CONV SLOPE | CONV SIZE | CONV Z | CONTROL Q | SOIL NAME | TC | RAIN | PCT IMPV |
|---|---|---|---|---|---|---|---|---|---|---|---|---|---|---|---|---|
| 1 | 1A | 1.3 | 2.84 | 1.3 | 2.84 | 0.128 | 0 | 0 | 0.00000 | 0.00 | 0.00 | 0 | 4 | 5 | 4.90 | 0.10 |
| 1 | 2A | 0.3 | 0.66 | 1.6 | 3.49 | 0.157 | 0 | 0 | 0.00000 | 0.00 | 0.00 | 0 | 4 | 5 | 4.90 | 0.10 |
| 1 | 3A | 1.0 | 2.18 | 2.6 | 5.68 | 0.256 | 0 | 0 | 0.00000 | 0.00 | 0.00 | 0 | 4 | 5 | 4.90 | 0.10 |
| 1 | 4A | 0.0 | 0.00 | 2.6 | 5.68 | 0.256 | 0 | 0 | 0.00000 | 0.00 | 0.00 | 0 | 4 | 0 | 4.90 | 0.00 |

Normal End of MODRAT

| | | | | | | | | | | | | | | | | |
|---|---|---|---|---|---|---|---|---|---|---|---|---|---|---|---|---|
| 1 | 2A | 0.0 | 0.00 | 0.0 | 0.00 | 0.000 | 3 | 179 | 0.02000 | 30-6 | 0.00 | 0 | 2 | 0 | 4.30 | 0.00 |
| 1 | 4A | 0.0 | 0.00 | 0.0 | 0.00 | 0.000 | 3 | 140 | 0.02000 | 30-6 | 0.00 | 0 | 2 | 0 | 4.30 | 0.00 |
| 1 | 6A | 0.0 | 0.00 | 0.0 | 0.00 | 0.000 | 3 | 353 | 0.02000 | 30-6 | 0.00 | 0 | 2 | 0 | 4.30 | 0.00 |
| 1 | 7A | 0.5 | 1.20 | 0.5 | 1.20 | 0.116 | 0 | 0 | 0.00000 | 0.00 | 0.00 | 0 | 4 | 5 | 4.90 | 0.55 |
| 1 | 8A | 0.9 | 2.17 | 1.4 | 3.37 | 0.324 | 0 | 0 | 0.00000 | 0.00 | 0.00 | 0 | 4 | 5 | 4.90 | 0.55 |
| 1 | 13B | 0.4 | 0.96 | 0.4 | 0.96 | 0.093 | 0 | 0 | 0.00000 | 0.00 | 0.00 | 0 | 4 | 5 | 4.90 | 0.55 |
| 1 | 14B | 0.0 | 0.00 | 0.4 | 0.96 | 0.023 | 3 | 134 | 0.03000 | 30-6 | 0.00 | 0 | 4 | 0 | 4.90 | 0.00 |
| 1 | 15B | 0.3 | 0.72 | 0.7 | 1.61 | 0.092 | 0 | 0 | 0.00000 | 0.00 | 0.00 | 0 | 4 | 5 | 4.90 | 0.55 |
| 1 | 16B | 0.0 | 0.00 | 0.7 | 1.61 | 0.040 | 3 | 329 | 0.03000 | 30-6 | 0.00 | 0 | 4 | 0 | 4.90 | 0.00 |
| 1 | 17B | 0.9 | 1.70 | 1.6 | 2.92 | 0.248 | 0 | 0 | 0.00000 | 0.00 | 0.00 | 0 | 4 | 8 | 4.90 | 0.55 |
| 1 | 18B | 0.6 | 1.32 | 2.2 | 4.04 | 0.386 | 0 | 0 | 0.00000 | 0.00 | 0.00 | 0 | 4 | 6 | 4.90 | 0.55 |
| 1 | 19B | 0.0 | 0.00 | 2.2 | 4.04 | 0.342 | 3 | 239 | 0.03000 | 30-6 | 0.00 | 0 | 4 | 0 | 4.90 | 0.00 |
| 1 | 20B | 0.2 | 0.48 | 2.4 | 4.16 | 0.388 | 0 | 0 | 0.00000 | 0.00 | 0.00 | 0 | 4 | 5 | 4.90 | 0.55 |
| 1 | 21B | 0.4 | 0.88 | 2.8 | 4.93 | 0.480 | 0 | 0 | 0.00000 | 0.00 | 0.00 | 0 | 4 | 6 | 4.90 | 0.55 |
| 1 | 22B | 0.3 | 0.72 | 3.1 | 5.49 | 0.550 | 0 | 0 | 0.00000 | 0.00 | 0.00 | 0 | 4 | 5 | 4.90 | 0.55 |
| 1 | 23B | 0.6 | 1.32 | 3.7 | 6.67 | 0.688 | 0 | 0 | 0.00000 | 0.00 | 0.00 | 0 | 4 | 6 | 4.90 | 0.55 |

**********

*  CONFLUENCE Q'S  *

* 1  24A  TA 1153 QA  3.37 QAB  9.24 QB  5.87  1  24B  TB 1155 QB  6.67 QB-5178235523661898500000000000000000000000

*  1  24AB TAB 1155 QAB  9.72 QA  3.05 QB  6.67

**********

| LOCATION | | SUBAREA AREA | SUBAREA Q | TOTAL AREA | TOTAL Q | TOTAL VOLUME | CONV TYPE | CONV LNGTH | CONV SLOPE | CONV SIZE | CONV Z | CONTROL Q | SOIL NAME | TC | RAIN | PCT IMPV |
|---|---|---|---|---|---|---|---|---|---|---|---|---|---|---|---|---|
| 1 | 24AB | 3.7 | 6.67 | 5.1 | 9.72 | 1.012 | 4 | 78 | 0.03000 | 2.00 | 0.00 | 0 | 4 | 0 | 4.90 | 0.00 |
| 1 | 25A | 0.2 | 0.48 | 5.3 | 10.15 | 1.058 | 0 | 0 | 0.00000 | 0.00 | 0.00 | 0 | 4 | 5 | 4.90 | 0.55 |
| 1 | 26A | 0.7 | 1.32 | 6.0 | 11.45 | 1.220 | 0 | 0 | 0.00000 | 0.00 | 0.00 | 0 | 4 | 8 | 4.90 | 0.55 |
| 1 | 27A | 0.0 | 0.00 | 6.0 | 11.45 | 1.220 | 0 | 0 | 0.00000 | 0.00 | 0.00 | 0 | 4 | 0 | 4.90 | 0.00 |

Normal End of MODRAT

| | | | | | | | | | | | | | | | | |
|---|---|---|---|---|---|---|---|---|---|---|---|---|---|---|---|---|
| 1 | 2A | 0.0 | 0.00 | 0.0 | 0.00 | 0.000 | 3 | 179 | 0.02000 | 30-6 | 0.00 | 0 | 2 | 0 | 4.90 | 0.00 |
| 1 | 4A | 0.0 | 0.00 | 0.0 | 0.00 | 0.000 | 3 | 140 | 0.02000 | 30-6 | 0.00 | 0 | 2 | 0 | 4.90 | 0.00 |
| 1 | 6A | 0.0 | 0.00 | 0.0 | 0.00 | 0.000 | 3 | 353 | 0.02000 | 30-6 | 0.00 | 0 | 2 | 0 | 4.90 | 0.00 |
| 1 | 7A | 0.9 | 1.88 | 0.9 | 1.88 | 0.181 | 0 | 0 | 0.00000 | 0.00 | 0.00 | 0 | 4 | 5 | 4.30 | 0.55 |
| 1 | 8A | 0.5 | 1.05 | 1.4 | 2.93 | 0.282 | 0 | 0 | 0.00000 | 0.00 | 0.00 | 0 | 4 | 5 | 4.30 | 0.55 |
| 1 | 13B | 0.4 | 0.84 | 0.4 | 0.84 | 0.081 | 0 | 0 | 0.00000 | 0.00 | 0.00 | 0 | 4 | 5 | 4.30 | 0.55 |
| 1 | 14B | 0.0 | 0.00 | 0.4 | 0.84 | 0.017 | 3 | 134 | 0.03000 | 30-6 | 0.00 | 0 | 4 | 0 | 4.30 | 0.00 |
| 1 | 15B | 0.3 | 0.63 | 0.7 | 1.39 | 0.077 | 0 | 0 | 0.00000 | 0.00 | 0.00 | 0 | 4 | 5 | 4.30 | 0.55 |
| 1 | 16B | 0.0 | 0.00 | 0.7 | 1.39 | 0.030 | 3 | 329 | 0.03000 | 30-6 | 0.00 | 0 | 4 | 0 | 4.30 | 0.00 |
| 1 | 17B | 0.9 | 1.39 | 1.6 | 2.50 | 0.211 | 0 | 0 | 0.00000 | 0.00 | 0.00 | 0 | 4 | 9 | 4.30 | 0.55 |
| 1 | 18B | 0.6 | 1.14 | 2.2 | 3.45 | 0.332 | 0 | 0 | 0.00000 | 0.00 | 0.00 | 0 | 4 | 6 | 4.30 | 0.55 |
| 1 | 19B | 0.0 | 0.00 | 2.2 | 3.45 | 0.258 | 3 | 239 | 0.03000 | 30-6 | 0.00 | 0 | 4 | 0 | 4.30 | 0.00 |
| 1 | 20B | 0.6 | 1.05 | 2.8 | 4.21 | 0.379 | 0 | 0 | 0.00000 | 0.00 | 0.00 | 0 | 4 | 7 | 4.30 | 0.55 |
| 1 | 21B | 0.3 | 0.63 | 3.1 | 4.62 | 0.440 | 0 | 0 | 0.00000 | 0.00 | 0.00 | 0 | 4 | 5 | 4.30 | 0.55 |
| 1 | 22B | 0.4 | 0.76 | 3.5 | 5.28 | 0.520 | 0 | 0 | 0.00000 | 0.00 | 0.00 | 0 | 4 | 6 | 4.30 | 0.55 |
| 1 | 23B | 0.2 | 0.42 | 3.7 | 5.61 | 0.560 | 0 | 0 | 0.00000 | 0.00 | 0.00 | 0 | 4 | 5 | 4.30 | 0.55 |

```
*****************************************************************************************************************************
*                                                                CONFLUENCE Q'S                                                *
* 1   24A  TA 1153 QA     2.93 QAB     7.83 QB     4.90       1   24B  TB 1156 QB     5.61 QB     0.00 QùA     2.29 Q     1.#R
*                                        1   24AB TAB 1155 QAB     8.23 QA     2.65 QB     5.59
*****************************************************************************************************************************
```

| LOCATION | | SUBAREA AREA | SUBAREA Q | TOTAL AREA | TOTAL Q | TOTAL VOLUME | CONV TYPE | CONV LNGTH | CONV SLOPE | CONV SIZE | CONV Z | CONTROL Q | SOIL NAME | TC | RAIN | PCT IMPV |
|---|---|---|---|---|---|---|---|---|---|---|---|---|---|---|---|---|
| 1 | 24AB | 3.7 | 5.61 | 5.1 | 3.67 | 0.838 | 4 | 78 | 0.03000 | 2.00 | 0.00 | 0 | 4 | 0 | 4.30 | 0.00 |
| 1 | 25A | 0.2 | 0.42 | 5.3 | 3.74 | 0.878 | 0 | 0 | 0.00000 | 0.00 | 0.00 | 0 | 4 | 5 | 4.30 | 0.55 |
| 1 | 26A | 0.7 | 1.15 | 6.0 | 4.68 | 1.019 | 0 | 0 | 0.00000 | 0.00 | 0.00 | 0 | 4 | 8 | 4.30 | 0.55 |
| 1 | 27A | 0.0 | 0.00 | 6.0 | 4.68 | 1.019 | 0 | 0 | 0.00000 | 0.00 | 0.00 | 0 | 4 | 0 | 4.30 | 0.00 |

Normal End of MODRAT

| | | | | | | | | | | | | | | | | |
|---|---|---|---|---|---|---|---|---|---|---|---|---|---|---|---|---|
| 1 | 2A | 0.0 | 0.00 | 0.0 | 0.00 | 0.000 | 3 | 179 | 0.02000 | 30-6 | 0.00 | 0 | 2 | 0 | 0.75 | 0.00 |
| 1 | 4A | 0.0 | 0.00 | 0.0 | 0.00 | 0.000 | 3 | 140 | 0.02000 | 30-6 | 0.00 | 0 | 2 | 0 | 0.75 | 0.00 |
| 1 | 6A | 0.0 | 0.00 | 0.0 | 0.00 | 0.000 | 3 | 353 | 0.02000 | 30-6 | 0.00 | 0 | 2 | 0 | 0.75 | 0.00 |
| 1 | 7A | 0.5 | 1.20 | 0.5 | 1.20 | 0.116 | 0 | 0 | 0.00000 | 0.00 | 0.00 | 0 | 4 | 5 | 4.90 | 0.55 |
| 1 | 8A | 0.9 | 2.17 | 1.4 | 3.37 | 0.324 | 0 | 0 | 0.00000 | 0.00 | 0.00 | 0 | 4 | 5 | 4.90 | 0.55 |
| 1 | 13B | 0.4 | 0.96 | 0.4 | 0.96 | 0.093 | 0 | 0 | 0.00000 | 0.00 | 0.00 | 0 | 4 | 5 | 4.90 | 0.55 |
| 1 | 14B | 0.0 | 0.00 | 0.4 | 0.96 | 0.023 | 3 | 134 | 0.03000 | 30-6 | 0.00 | 0 | 4 | 0 | 4.90 | 0.00 |
| 1 | 15B | 0.3 | 0.72 | 0.7 | 1.61 | 0.092 | 0 | 0 | 0.00000 | 0.00 | 0.00 | 0 | 4 | 5 | 4.90 | 0.55 |
| 1 | 16B | 0.0 | 0.00 | 0.7 | 1.61 | 0.040 | 3 | 329 | 0.03000 | 30-6 | 0.00 | 0 | 4 | 0 | 4.90 | 0.00 |
| 1 | 17B | 0.9 | 1.70 | 1.6 | 2.92 | 0.248 | 0 | 0 | 0.00000 | 0.00 | 0.00 | 0 | 4 | 8 | 4.90 | 0.55 |
| 1 | 18B | 0.6 | 1.32 | 2.2 | 4.04 | 0.386 | 0 | 0 | 0.00000 | 0.00 | 0.00 | 0 | 4 | 6 | 4.90 | 0.55 |
| 1 | 19B | 0.0 | 0.00 | 2.2 | 4.04 | 0.342 | 3 | 239 | 0.03000 | 30-6 | 0.00 | 0 | 4 | 0 | 4.90 | 0.00 |
| 1 | 20B | 0.2 | 0.48 | 2.4 | 4.16 | 0.388 | 0 | 0 | 0.00000 | 0.00 | 0.00 | 0 | 4 | 5 | 4.90 | 0.55 |
| 1 | 21B | 0.4 | 0.88 | 2.8 | 4.93 | 0.480 | 0 | 0 | 0.00000 | 0.00 | 0.00 | 0 | 4 | 6 | 4.90 | 0.55 |
| 1 | 22B | 0.3 | 0.72 | 3.1 | 5.49 | 0.550 | 0 | 0 | 0.00000 | 0.00 | 0.00 | 0 | 4 | 5 | 4.90 | 0.55 |
| 1 | 23B | 0.6 | 1.32 | 3.7 | 6.67 | 0.688 | 0 | 0 | 0.00000 | 0.00 | 0.00 | 0 | 4 | 6 | 4.90 | 0.55 |

```
*****************************************************************************************************************************
*                                                                CONFLUENCE Q'S                                                *
* 1   24A  TA 1153 QA     3.37 QAB     9.24 QB     5.87       1   24B  TB 1155 QB     6.67 QB-5178235523661898500000000000000000000000
*                                        1   24AB TAB 1155 QAB     9.72 QA     3.05 QB     6.67
*****************************************************************************************************************************
```

| LOCATION | | SUBAREA AREA | SUBAREA Q | TOTAL AREA | TOTAL Q | TOTAL VOLUME | CONV TYPE | CONV LNGTH | CONV SLOPE | CONV SIZE | CONV Z | CONTROL Q | SOIL NAME | TC | RAIN | PCT IMPV |
|---|---|---|---|---|---|---|---|---|---|---|---|---|---|---|---|---|
| 1 | 24AB | 3.7 | 6.67 | 5.1 | 4.22 | 1.008 | 4 | 78 | 0.03000 | 2.00 | 0.00 | 0 | 4 | 0 | 4.90 | 0.00 |
| 1 | 25A | 0.2 | 0.48 | 5.3 | 4.30 | 1.055 | 0 | 0 | 0.00000 | 0.00 | 0.00 | 0 | 4 | 5 | 4.90 | 0.55 |
| 1 | 26A | 0.7 | 1.32 | 6.0 | 5.40 | 1.216 | 0 | 0 | 0.00000 | 0.00 | 0.00 | 0 | 4 | 8 | 4.90 | 0.55 |
| 1 | 27A | 0.0 | 0.00 | 6.0 | 5.40 | 1.216 | 0 | 0 | 0.00000 | 0.00 | 0.00 | 0 | 4 | 0 | 4.90 | 0.00 |

Normal End of MODRAT

# PRELIMINARY
# STANDARD URBAN STORMWATER MITIGATION PLAN
# (SUSMP)

## TRUMARK CRESTRIDGE
RANCHO PALOS VERDES, CA 90275

**Prepared for:**

**Trumark Companies**
**9911 Irvine Center Drive, Suite 150**
**Irvine, CA 92618**

**Prepared by:**

**RBF Consulting, a company of Michael Baker Corporation**
**14725 Alton Parkway**
**Irvine, CA 92618**

**April 12, 2012**

## TABLE OF CONTENTS

**BACKGROUND** ..... **1**

**INTRODUCTION** ..... **1**

**PROJECT SITE WATERSHED AND DRAINAGE PATTERNS** ..... **2**

**SUSMP REQUIREMENTS** ..... **4**

1. PEAK STORM WATER RUNOFF DISCHARGE RATES ..... 4
2. CONSERVE NATURAL AREAS ..... 5
3. MINIMIZE STORM WATER POLLUTANTS OF CONCERN ..... 5
4. PROTECT SLOPES AND CHANNELS ..... 5
5. PROVIDE STORM DRAIN SYSTEM STENCILING AND SIGNAGE ..... 6
6. PROPERLY DESIGN OUTDOOR MATERIAL STORAGE AREAS ..... 6
7. PROPERLY DESIGN TRASH STORAGE AREAS ..... 6
8. PROVIDE PROOF OF ONGOING BMP MAINTENANCE ..... 6
9. DESIGN STANDARDS FOR STRUCTURAL OR TREATMENT CONTROL BMPS ..... 6
10. INDIVIDUAL PRIORITY PROJECT CATEGORIES ..... 7
11. WAIVER ..... 8
12. MITIGATION FUNDING ..... 8
13. LIMITATION ON USE OF INFILTRATION BMPS ..... 8
14. ALTERNATIVE CERTIFICATION FOR STORM WATER TREATMENT MITIGATION ..... 8

## LIST OF TABLES

TABLE 1: PROJECT RUNOFF CHARACTERISTICS ..... 4
TABLE 2: BMP DESIGN STANDARDS ..... 6
TABLE 3: PRIORITY PROJECT CATEGORIES ..... 7

## LIST OF FIGURES

FIGURE 1: VICINITY MAP ..... 2

## LIST OF APPENDICES

**APPENDIX A: HYDROLOGY CALCULATIONS, HYDROLOGY AND BMP MAPS**

**APPENDIX B: BMP DESIGN CRITERIA**

**APPENDIX C: MASTER COVENANT AND AGREEMENT**

**APPENDIX D: OPERATION AND MAINTENANCE OF BMPS**

**APPENDIX E: STORM DRAIN STENCIL EXAMPLE**

## Background

On December 13, 2001, the Los Angeles Regional Water Quality Control Board (LARWQCB) adopted a National Pollutant Discharge Elimination System Permit (NPDES Permit No. CAS004001, Order No. 01-182) to regulate municipal and urban runoff storm water discharges within the County of Los Angeles. Under this Order, the Los Angeles County Flood Control District, and incorporated cities within the County, including the City of Rancho Palos Verdes, are required to ensure that all new development and redevelopment projects minimize impacts from storm water runoff and urban runoff discharges effective September 2, 2002. Section D.2 of the Order requires the preparation of a Standard Urban Storm Water Mitigation Plan (SUSMP) for certain types of new development/significant redevelopment projects as well as certain development project features. The purpose of the SUSMP is to ensure that post-construction Best Management Practices (BMPs) are incorporated into the project, and then maintained to reduce the discharge of pollutants from storm water and urban runoff discharges to the maximum extent practicable.

## Introduction

Trumark Companies has contracted with RBF Consulting to prepare design plans for the Crestridge development. The project site is 9.7 acres which will consist of 60 senior restricted living dwelling units (55+ years of age), a community service center, open space with a low-impact trail system, street areas and 32 guest parking spaces. The development is located northwest of the intersection of Crestridge Road and Crenshaw Boulevard in the City of Rancho Palos Verdes (Vicinity Map in Figure 1).

This SUSMP document provides information about the proposed project, and discusses how features incorporated into the project design meet the applicable SUSMP requirements. Attached appendices are included to provide supporting detail.

**Figure 1: Vicinity Map**

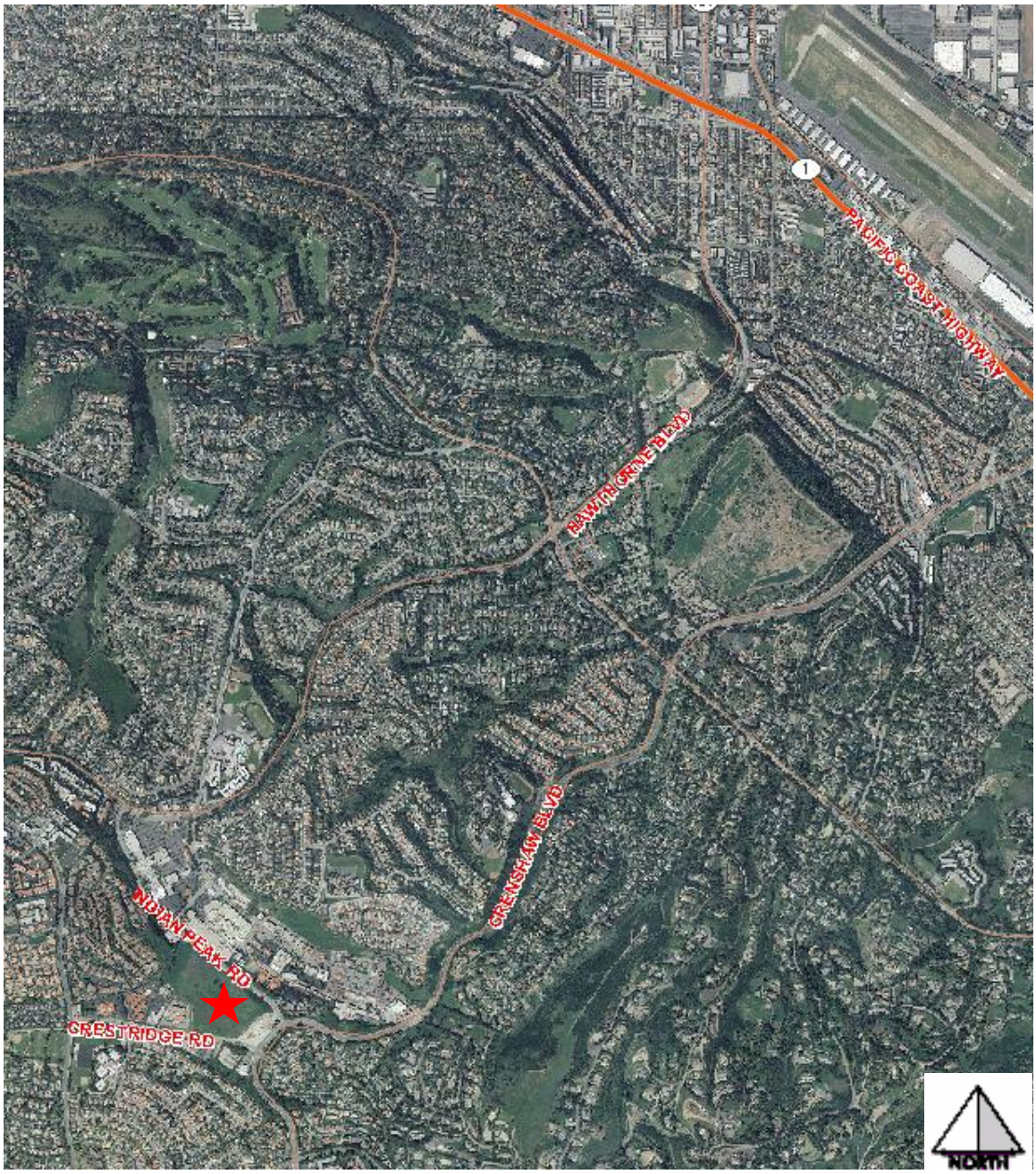


**Project Site Watershed and Drainage Patterns**

The project is located within the Dominguez Channel Watershed in Los Angeles County. Runoff is currently conveyed by surface flow across the undeveloped site. The existing site is split into two drainage areas. The southern portion of the site drains to Crestridge Drive and the existing storm drain, Watershed A. Watershed B drains via the natural slope to the north and Indian Peak Road. Based on the City of Rancho Palos Verdes Master Plan of Drainage there is an existing 30" RCP on Crestridge Drive. The local

storm drain system eventually conveys the runoff to the Pacific Ocean via Dominguez Channel and Los Angeles Harbor, at San Pedro Bay.

The post construction site is broken into three watersheds that include Filterra Biorentention units, pervious pavers, and an underground detention system. The Filterra units and pervious pavers have been designed to treat runoff from the water quality event ($85^{th}$ % storm). Runoff will be treated by Filterra units prior to entering the subsurface detention system and include bypasses for larger events.

Ideally, infiltration devices would be utilized to mitigate the increase in runoff and pollutants from the post-development site. However, the site is located atop a large rocky hill (poor to very poor infiltration potential) with steep slopes around the perimeter which is not ideal for infiltration implementation. There have been no infiltration or geotechnical reports prepared for reference. An infiltration basin large enough to mitigate the water quality event volume with the poor to very poor permeable soils anticipated onsite would require a very large footprint. And, that makes infiltration devices infeasible due to the limited site area and inability to meet setback requirements from steep perimeter slopes and proposed building foundations. Therefore, it has been deemed infeasible to incorporate large infiltration devices. A subsurface detention system was designed to mitigate the difference in the 50-year flows between pre- and post-construction conditions. The detention system will control the water by means of a hydraulic control structure, remove particulate pollutants, and reduce maximum runoff values to pre-development levels.

Watershed A covers the eastern portion of the site (1.1 acres). It is sloped from east to west and its runoff is captured by a catch basin and treated by a Filterra unit. Drainage area A-2 is approximately 0.7 acres. The southern portion of this area (0.15 acres) located south of the proposed catch basin and Filterra unit within drainage area A-2 (See BMP Map in Appendix A) which makes up the entrance/exit access for the development, will not be treated by the proposed Filterra unit. Pervious pavers have been proposed to mitigate the $85^{th}$% storm runoff in this small area of the project. Additional area of pervious pavers has been proposed beyond that of the BMP calculations in Appendix B. This was done to add a factor of safety in case the site soils have less infiltration potential than estimated, and so that under drains will not be required. During large storm events runoff that is not infiltrated through the pervious pavers, will flow to Crestridge Drive and then to the east entering the existing storm drain system.

Watershed B covers the northern portion of the site shown as B-1, B-2, and B-3 in the Proposed Hydrology Map in Appendix A (2.6 acres). These areas of the site are proposed as open space and will drain by sheet flow to the north over the vegetated land before reaching Indian Peak Road per the existing condition.

Watershed C encompasses the remainder of the site (6 acres) which drains from east to west to the two catch basins and four Filterra units proposed in the sump condition at the southeastern corner of the site. Here, the Filterra units will pretreat the water before entering the subsurface detention system.

The impervious portion of the site for the proposed condition will drain by street flow to the designated catch basins, Filterra units and the detention system. The small portion of the site that makes up the southern tip of Drainage Area A-2 will drain to pervious pavers. This process will mitigate the increase in post-construction runoff by treating and

detaining the runoff prior to discharge to the storm drain system while releasing the water at predevelopment rates. In the absence of feasible infiltration devices, the subsurface detention system is required to ensure that downstream receiving water bodies are not adversely affected by the increased post-development runoff.

SUSMP Requirements:
The SUSMP requires that 14 categories be addressed by the project to the extent applicable. The following sections address each of the required categories, and how the proposed project meets the SUSMP requirements, to the extent practicable.

**1. Peak Storm Water Runoff Discharge Rates**
The SUSMP states that the post-project peak storm water runoff discharge rates shall not exceed the pre-project rate for developments where the increased peak storm water discharge rate estimated will result in increased potential for downstream erosion.

Both the Los Angeles County SUSMP and Hydrology Manuals were used in developing runoff characteristics for this project. According to these manuals the 85$^{th}$ percentile, 25 and 50 year storm events needed to be evaluated. The Rational Method, Tc Calculator, and MODRAT were used to calculate these values.

Table 1 shows the pre versus post development discharge rates and volumes produced from the 85$^{th}$ percentile, 25 and 50 year storm events.

**Table 1: Project Runoff Characteristics**

| | | 50-yr Storm Event | | | | | | | |
|---|---|---|---|---|---|---|---|---|---|
| | | Existing Condition | | | Proposed Condition | | | Mitigation | Mitigation |
| | | Area | Q | Volume | Area | Q | Volume | | (x) |
| | | *ac.* | *cfs* | *ac-ft* | *ac.* | *cfs* | *ac-ft* | *(ac-ft)* | *(ac-ft)* |
| Watershed A | | 4.2 | 8.6 | 0.27 | 1.1 | 2.23 | 0.09 | | |
| Watershed B | (Natural Slope) | 5.5 | 11.6 | 0.54 | 2.6 | 5.7 | 0.26 | | |
| Watershed C | | - | - | - | 6 | 11.45 | 1.22 | | |
| | | | | **0.81** | | | **1.57** | **0.76** | **1.041** |
| | | 9.7 | 8.6 | | 9.7 | 13.68 | | | |

| | | 25-yr Storm Event | | | | | | | |
|---|---|---|---|---|---|---|---|---|---|
| | | Existing Condition | | | Proposed Condition | | | Mitigation | Mitigation |
| | | Area | Q | Volume | Area | Q | Volume | | (x) |
| | | *ac.* | *cfs* | *ac-ft* | *ac.* | *cfs* | *ac-ft* | *ac-ft* | *(ac-ft)* |
| Watershed A | | 4.2 | 6.9 | 0.22 | 1.1 | 1.84 | 0.08 | | |
| Watershed B | (Natural Slope) | 5.5 | 9.6 | 0.46 | 2.6 | 4.9 | 0.22 | | |
| Watershed C | | - | - | - | 6 | 9.73 | 1.02 | | |
| | | | | **0.68** | | | **1.31** | **0.64** | **0.879** |
| | | | **6.9** | | | **11.57** | | | |

| | | 85th Percentile | | | | | | | |
|---|---|---|---|---|---|---|---|---|---|
| | | Existing Condition | | | Proposed Condition | | | Mitigation | Mitigation |
| | | Area | Q | Volume | Area | Q | Volume | | (x) |
| | | *ac.* | *cfs* | *ac-ft* | *ac.* | *cfs* | *ac-ft* | *ac-ft* | *(ac-ft)* |
| Watershed A | | 4.2 | 0.06 | 0.02 | 1.1 | 0.03 | 0.01 | | |
| Watershed B | (Natural Slope) | 5.5 | 0.19 | 0.06 | 2.6 | 0.11 | 0.03 | | |
| Watershed C | | - | - | - | 6 | 0.6 | 0.06 | | |
| | | | | **0.08** | | | **0.10** | **0.02** | **0.05** |

There is no soils report available for the site at this time. However, the project site is located atop a large hill with steep perimeter slopes and presumably has soils with poor infiltration potential.

In order for the post-construction site to be compliant with local stormwater permits, bioretention, pervious pavers, and a subsurface detention system is proposed to treat and mitigate the increase in runoff due to the site's development. The proposed system consists of Filterra bioretention units, Belgard pervious pavers, and an underground reinforced concrete box detention system. This system will ensure that the pollutants of concern are removed while mitigating the increase in runoff to match predevelopment flow rates.

## 2. Conserve Natural Areas

The second requirement covered in the SUSMP discusses potential design strategies to conserve. Due to the steep slopes natural areas were conserved when possible. Native drought tolerant vegetation will be implemented throughout the site to mimic natural conditions.

## 3. Minimize Storm Water Pollutants of Concern

Pollutants of concern from the proposed project are trash, oil and grease, sediments, bacteria, heavy metals, pesticides, nutrients, and organic compounds.

*Structural BMPs*

Pollutants will be controlled through treatment that will be provided by the proposed Filterra Biorentention units and Belgard pervious pavers.
There is no outdoor storage proposed and no vehicle fueling or washing is anticipated on-site. The trash enclosures within the development have been designed to a level that is in accordance with the Los Angeles County SUSMP Manual.

*Non-structural BMPs*
The following non-structural BMPs will be implemented to reduce or eliminate the off-site discharge of pollutants:

- Routine landscape maintenance (weekly), including proper pick up and disposal of trash throughout the site, sediment and green waste.
- Proper fertilizer and pesticide management (minimizing use, not applying before predicted rain, proper disposal of unused/excess product).
- Automatic irrigation to minimize excess runoff.
- Public education through the use of storm drain stencils.

**4. Protect Slopes and Channels**
Native drought tolerant vegetation will be implemented throughout the site to mimic natural conditions. The developed portion of the site will be gradually sloped with average slopes of about 4%. However, there is a significant elevation change across the site as the maximum elevation differential is 150 feet (1200 ft at northwest boundary and 1050 at Crenshaw Boulevard and Indian Peak Road intersection). All steeper slopes proposed, primarily along the north and east boundaries will be vegetated.

**5. Provide Storm Drain System Stenciling and Signage**
All new on-site storm drain inlets/catch basins will be labeled with the message “No Dumping – Drains to Ocean” or equivalent message as directed by the City (See Appendix E).

**6. Properly Design Outdoor Material Storage Areas**
This requirement does not apply to the project, as the project does not include any outdoor material storage areas.

**7. Properly Design Trash Storage Areas**
The property owners will be required to use covered trash containers as well as drainage features from adjoining roofs and pavement to divert runoff around the area(s).

**8. Provide Proof of Ongoing BMP Maintenance**
A combination of treatment control and non-structural BMPs will be implemented and maintained where applicable. The City of Rancho Palos Verdes will be responsible for the storm drains and catch basins. The owner/developer will be responsible for the proposed Filterra units, pervious pavers, and the subsurface detention system until the community HOA is established.

The following are the treatment control BMPs and their specific routine maintenance:

- Filterra Biorention Units
- Belgard Pervious Pavers
- Subsurface Concrete Detention System

The Master Covenant and Agreement in Appendix C binds the owners and City in agreeing to the on-site BMP maintenance responsibilities. Appendix D highlights specifics regarding contact information, maintenance and inspection activities, schedules, and indicators signaling the need for immediate attention. Inspection and maintenance forms are imperative for the success of the BMP. They will help to facilitate the inspection process and record keeping. Inspection records will be kept in an easy to access location for review by regulatory agencies as necessary.

Refer to the BMP Map in Appendix A for locations of all proposed BMPs and maintenance access.

## 9. Design Standards for Structural or Treatment Control BMPs

The project is not exempt from including treatment control BMPs because it is classified as a housing development of ten units or more. A post construction treatment control BMP has been designed to mitigate storm water runoff per the SUSMP numeric sizing criteria and as summarized in Table 2. Appendix A provides hydrologic maps and calculations, and Appendix B provides BMP design calculations and guidelines.

**Table 2: BMP Design Standards**

| BMP | Volume Based | Flow Based | Method |
|---|---|---|---|
| Filterra Biorention Units | NA | See Design Calcs in Appendix B | The Filterra units were designed to treat runoff from the water quality event prior to entering the subsurface detention system. |
| Belgard Pervious Pavers | See Design Calcs in Appendix B | NA | The pervious pavers were designed to treat and infiltrate the water quality event of the small drainage area at the southern tip of A-2. |
| Subsurface Concrete Detention System | See Design Calcs in Appendix B | NA | The subsurface detention system was designed to mitigate the difference in the 50-yr flows between pre and post conditions (8'W x 5'H x 385'L). |

The SUSMP requires storm drain facilities to be designed to criteria selected by the local agency.

## 10. Individual Priority Project Categories

Table 3 shows individual priority project categories included in this project and those that were not included.

**Table 3: Priority Project Categories**

| Category | Requirement | Check One | | Explain |
|---|---|---|---|---|
| | | Included | Not Applicable | |
| Single-Family Hillside Home | Divert Roof Runoff | | X | No hillside homes |
| | Divert Surface Flow | | X | No hillside homes |
| 100,000 Sq. Ft. | Properly design loading | | X | No docking areas |

| Category | Requirement | Check One | | Explain |
|---|---|---|---|---|
| Industrial /Commercial Development | /unloading dock areas | | | |
| | Properly design repair /maintenance bays | | X | No repair bays |
| | Properly design vehicle/equipment wash areas | | X | No wash areas |
| Restaurants | Properly design equipment/accessory wash areas | | X | No restaurants |
| Retail Gasoline Outlets | Properly design fueling area | | X | No gasoline outlets |
| Automotive Repair Shops | Properly design fueling area | | X | No auto repair shops. |
| | Properly design repair /maintenance bays | | X | No an auto repair shops. |
| | Properly design vehicle /equipment wash areas | | X | No an auto repair shops. |
| | Properly design loading /unloading dock areas | | X | No an auto repair shops. |
| Parking Lots | Properly design parking area | X | | Reduce, infiltrate, and treat runoff before it reaches storm drain system |
| | Properly design to limit oil contamination and perform maintenance | X | | Flows to Inlet Filters, CDS unit and Detention Basin |

"Parking Lot" means land area or facility for parking or storage of motor vehicles used for business, commerce, industry, or personal use, with a lot size of 5,000 square feet or more of surface area, or with 25 or more parking spaces. There are 32 parking spaces proposed as part of the development plans (See Hydrology Maps in Appendix A).

Specific Requirements:

1. Properly Design Parking Area

    - Reduce impervious land coverage of parking area by providing planter strips between parking bays.
    - Infiltrate runoff into landscape areas before it reaches the storm drain system.
    - Treat runoff on-site before it reaches the street and storm drain system.

2. Properly Design To Limit Oil Contamination And Perform Maintenance

    - Treat to remove oil and petroleum hydrocarbons at parking lots that are heavily used.

- Ensure adequate operation and maintenance of treatment systems particularly sludge and oil removal, and system fouling and plugging prevention control

**11. Waiver**
The project does include treatment BMPs. Therefore, this section does not apply.

**12. Mitigation Funding**
The project incorporates BMPs on site; therefore, there is no need to pursue off-site or regional treatment solutions, and therefore no need for mitigation funding.

**13. Limitation on Use of Infiltration BMPs**
There are no specific restrictions on the use of infiltration BMPs for the project, since the site is not subject to high vehicular traffic (15,000 or greater average daily traffic, ADT).

**14. Alternative Certification for Storm Water Treatment Mitigation**
David Kirby registered Civil Engineer in the State of California will provide the signed certification that the plan meets the criteria established herein.

The engineer's certification is based on the level of information available at the time the report was prepared. As additional information comes available, such as geotechnical reports and/or infiltration test results, the report will need to be modified accordingly. This could result in BMP redesign or the selection of different BMPs based on that new information.

# Appendix A: Hydrology Calculations, Hydrology and BMP Maps

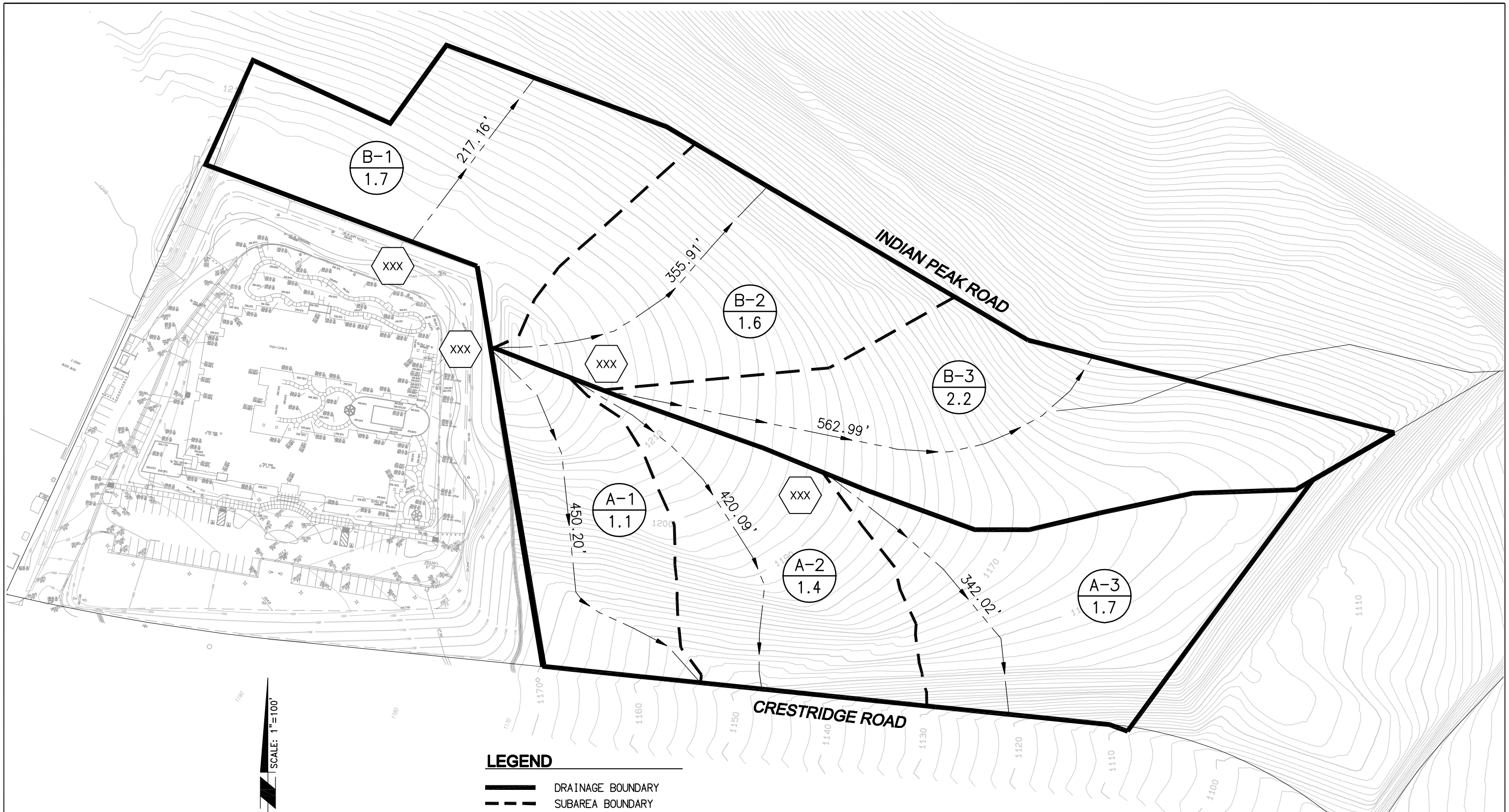


# EXHIBIT 3
# TRUMARK - RPV
# EXISTING CONDITION HYDROLOGY MAP

H:\PDATA\10108226\TRUMARK RPV\CADD\STRMWATER\EXHIBITS\EXISTING HYDRO MAP.DWG EMILYCHEN 2/17/12 9:01 am

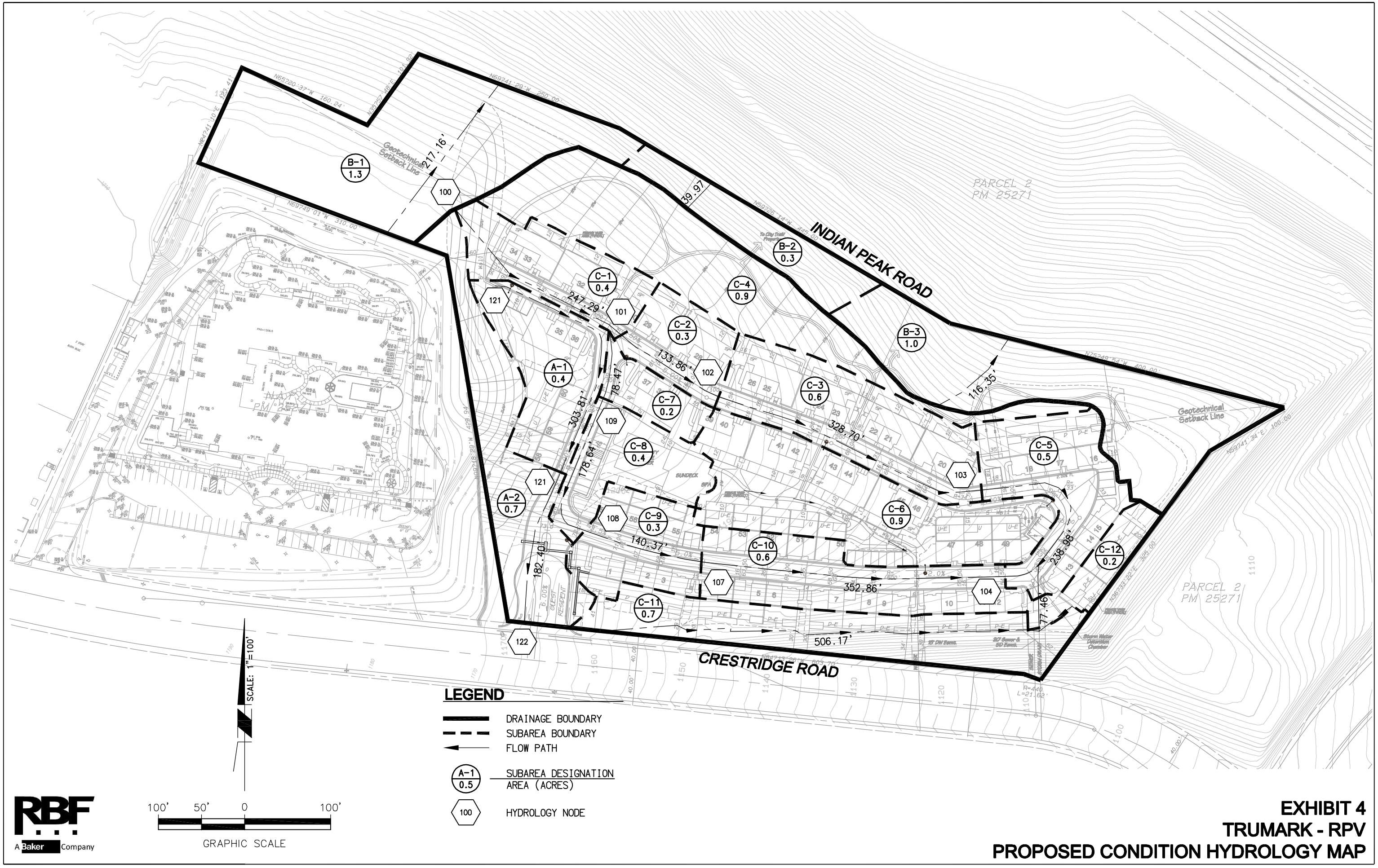


# EXHIBIT 4
# TRUMARK - RPV
# PROPOSED CONDITION HYDROLOGY MAP

H:\PDATA\10108226\TRUMARK RPV\CADD\STRMWATER\EXHIBITS\PROPOSED CONDITION HYDROLOGY.DWG EMILYCHEN 2/17/12 9:02 am

INDIAN PEAK ROAD

PARCEL 2
PM 25271

Geotechnical Setback Line

To City Trail Property

UNDERGROUND DETENTION

#1 #2 #3 #4 #5

500 SQ.FT. OF PAVERS

GUEST RESIDENT

CRESTRIDGE ROAD

Storm Water Detention Chamber

SCALE: 1"=100'

100' 50' 0 100'

GRAPHIC SCALE

## LEGEND

- PROJECT BOUNDARY
- UNDERGROUND DETENTION LOCATION
- FLOW PATH
- BIORETENTION PLANTER BMP
- PERVIOUS PAVERS

# TRUMARK - RPV
# PROPOSED WATER QUALITY BMP LOCATION MAP

H:\PDATA\10108226\TRUMARK RPV\SUSMP\CAD\BMP\WQ BMP MAP.DWG DKIRBY 4/12/12 8:16 am

| | | 50-yr Storm Event | | | | | | | |
|---|---|---|---|---|---|---|---|---|---|
| | | Existing Condition | | | Proposed Condition | | | Mitigation | Mitigation |
| | | Area | Q | Volume | Area | Q | Volume | | *(x)* |
| | | *ac.* | *cfs* | *ac-ft* | *ac.* | *cfs* | *ac-ft* | *(ac-ft)* | *(ac-ft)* |
| Watershed A | | 4.2 | 8.6 | 0.27 | 1.1 | 2.23 | 0.09 | | |
| Watershed B | (Natural Slope) | 5.5 | 11.6 | 0.54 | 2.6 | 5.7 | 0.26 | | |
| Watershed C | | - | - | - | 6 | 11.45 | 1.22 | | |
| | | | | **0.81** | | | **1.57** | **0.76** | **1.041** |
| | | 9.7 | 8.6 | | 9.7 | 13.68 | | | |

| | | 25-yr Storm Event | | | | | | | |
|---|---|---|---|---|---|---|---|---|---|
| | | Existing Condition | | | Proposed Condition | | | Mitigation | Mitigation |
| | | Area | Q | Volume | Area | Q | Volume | | *(x)* |
| | | *ac.* | *cfs* | *ac-ft* | *ac.* | *cfs* | *ac-ft* | *ac-ft* | *(ac-ft)* |
| Watershed A | | 4.2 | 6.9 | 0.22 | 1.1 | 1.84 | 0.08 | | |
| Watershed B | (Natural Slope) | 5.5 | 9.6 | 0.46 | 2.6 | 4.9 | 0.22 | | |
| Watershed C | | - | - | - | 6 | 9.73 | 1.02 | | |
| | | | | **0.68** | | | **1.31** | **0.64** | **0.879** |
| | | | **6.9** | | | **11.57** | | | |

| | | 85th Percentile | | | | | | | |
|---|---|---|---|---|---|---|---|---|---|
| | | Existing Condition | | | Proposed Condition | | | Mitigation | Mitigation |
| | | Area | Q | Volume | Area | Q | Volume | | *(x)* |
| | | *ac.* | *cfs* | *ac-ft* | *ac.* | *cfs* | *ac-ft* | *ac-ft* | *(ac-ft)* |
| Watershed A | | 4.2 | 0.06 | 0.02 | 1.1 | 0.03 | 0.01 | | |
| Watershed B | (Natural Slope) | 5.5 | 0.19 | 0.06 | 2.6 | 0.11 | 0.03 | | |
| Watershed C | | - | - | - | 6 | 0.6 | 0.06 | | |
| | | | | **0.08** | | | **0.10** | **0.02** | **0.05** |

| | | 50-yr Storm Event | | | | | | |
|---|---|---|---|---|---|---|---|---|
| | | Existing Condition | | | Proposed Condition | | | Mitigation |
| | | Area | Q | Volume | Area | Q | Volume | |
| | | *ac.* | *cfs* | *ac-ft* | *ac.* | *cfs* | *ac-ft* | *ac-ft* |
| Watershed A | | 4.2 | 8.6 | 0.27 | 1.1 | 2.5 | 0.10 | |
| Watershed B | (Natural Slope) | | | | | | | |
| Watershed C | | - | - | - | 6 | 5.4 | 1.22 | |
| | | | | **0.27** | | | **1.32** | **1.05** |
| | | | 8.6 | | | 7.9 | | |

| | | 25-yr Storm Event | | | | | | |
|---|---|---|---|---|---|---|---|---|
| | | Existing Condition | | | Proposed Condition | | | Mitigation |
| | | Area | Q | Volume | Area | Q | Volume | |
| | | *ac.* | *cfs* | *ac-ft* | *ac.* | *cfs* | *ac-ft* | *ac-ft* |
| Watershed A | | 4.2 | 6.9 | 0.22 | 1.1 | 2.1 | 0.08 | |
| Watershed B | (Natural Slope) | | | | | | | |
| Watershed C | | - | - | - | 6 | 4.7 | 1.02 | |
| | | | | **0.22** | | | **1.10** | **0.88** |
| | | | **6.9** | | | **6.8** | | |

Note:
Existing Site Imperviousness = 10%
Proposed Site Imperviousness = 55%

# Appendix B: BMP Design Criteria

**Filterra Bioretention Design Calculations**

**Filterra Unit #1**

See Proposed BMP Location Map in Appendix A for location.

| Project | Subarea | Area (acres) | %imp | Frequency | Soil Type | Length (ft) | Slope (ft/ft) | Isohyet (in.) | Tc-calculated (min.) | Intensity (in./hr) | Cu | Cd | Flowrate (cfs) |
|---|---|---|---|---|---|---|---|---|---|---|---|---|---|
| RPV | A-1 | 0.5 | 0.55 | 85th % | 4 | 303.8 | 0.079 | 0.75 | 21 | 0.23 | 0.1 | 0.54 | 0.06 |
| RPV | A-2 | 0.54 | 0.55 | 85th % | 4 | 182.4 | 0.033 | 0.75 | 17 | 0.25 | 0.1 | 0.54 | 0.07 |
| | | | | | | | | | | | | | **0.13** |

Tc Equation

Tc=(10)^-0.507*(Cd*I)^-0.519*(L)^0.483*(S)^-0.135

| Recommended Filterra Unit: | | |
|---|---|---|
| Filterra Size (ft) | Flowrate (cfs) | Connection Drainage Pipe |
| 6x10 or 10x6 | 0.14 | 6" SDR-35 PVC |
| Sizing based on Table 3 from Section D, Filterra Techincal Section in Appendix B | | |

**Filterra Units #2, 3, 4 & 5**

The two catch basins in the sump condition will have filterra units on either side of each catch basin to catch flows from both directions. Therefore, four filterra units will be installed adjacent to the two proposed catch basins (See proposed BMP Location Map in Appendix A).

| Project | Subarea | Area (acres) | %imp | Frequency | Soil Type | Length (ft) | Slope (ft/ft) | Isohyet (in.) | Tc-calculated (min.) | Intensity (in./hr) | Cu | Cd | Flowrate (cfs) |
|---|---|---|---|---|---|---|---|---|---|---|---|---|---|
| RPV | C-1 | 0.4 | 0.55 | 85th % | 4 | 247.3 | 0.102 | 0.75 | 17 | 0.25 | 0.1 | 0.54 | 0.05 |
| RPV | C-2 | 0.3 | 0.55 | 85th % | 4 | 205.9 | 0.033 | 0.75 | 19 | 0.24 | 0.1 | 0.54 | 0.04 |
| RPV | C-3 | 0.7 | 0.55 | 85th % | 4 | 406.2 | 0.043 | 0.75 | 27 | 0.2 | 0.1 | 0.54 | 0.08 |
| RPV | C-4 | 1 | 0.55 | 85th % | 4 | 720 | 0.056 | 0.75 | 30 | 0.19 | 0.1 | 0.54 | 0.1 |
| RPV | C-5 | 0.5 | 0.55 | 85th % | 4 | 269.1 | 0.026 | 0.75 | 23 | 0.22 | 0.1 | 0.54 | 0.06 |
| RPV | C-6 | 0.9 | 0.55 | 85th % | 4 | 354.9 | 0.063 | 0.75 | 23 | 0.22 | 0.1 | 0.54 | 0.11 |
| RPV | C-7 | 0.2 | 0.55 | 85th % | 4 | 78.5 | 0.061 | 0.75 | 9 | 0.34 | 0.1 | 0.54 | 0.04 |
| RPV | C-8 | 0.4 | 0.55 | 85th % | 4 | 285.7 | 0.011 | 0.75 | 28 | 0.2 | 0.1 | 0.54 | 0.04 |
| RPV | C-9 | 0.4 | 0.55 | 85th % | 4 | 195.6 | 0.035 | 0.75 | 17 | 0.25 | 0.1 | 0.54 | 0.05 |
| RPV | C-10 | 0.6 | 0.55 | 85th % | 4 | 395.1 | 0.033 | 0.75 | 28 | 0.2 | 0.1 | 0.54 | 0.06 |
| RPV | C-11 | 0.7 | 0.55 | 85th % | 4 | 506.2 | 0.021 | 0.75 | 30 | 0.19 | 0.1 | 0.54 | 0.07 |
| RPV | C-12 | 0.2 | 0.55 | 85th % | 4 | 215.6 | 0.021 | 0.75 | 21 | 0.23 | 0.1 | 0.54 | 0.02 |
| | | | | | | | | | | | | | 0.72 |

Tc Equation

Tc=(10)^-0.507*(Cd*I)^-0.519*(L)^0.483*(S)^-0.135

Four Filterra Units will be installed.

Therefore, 0.72 cfs / 4 = **0.18** cfs per Filterra

| Recommended Filterra Unit: | | |
|---|---|---|
| Filterra Size (ft) | Flowrate (cfs) | Connection Drainage Pipe |
| 6x12 or 12x6 | 0.168 | 6" SDR-35 PVC |
| Sizing based on Table 3 from Section D, Filterra Techincal Section in Appendix B | | |

Note:

This is a conservative calculation for flowrate per Filterra unit as the calculation sums the flowrates from each tributary area and then divides it by the four units. This provides a generous factor of safety. Since the larger factor of safety is included in the flowrate calculation it is fair to say that the largest size of Filterra as described in the reference Table 3 will suffice for the required treatment.

## Pervious Pavers Design Calculations

**Pervious Pavers**

See Proposed BMP Location Map in Appendix A for location.

Design Capture Volume Calculation:

| | | |
|---|---|---|
| Drainage Area (A) = | 0.15 | acres (Southern portion of Drainage Area A-2) |
| Imperviousness (I) = | 70% | |
| Effective Retention Depth ($d_{eff}$) = | 0.2 | inches |
| Design Infiltration Rate ($K_d$) = | 0.3 | in/hr (Low rate emphasizes anticipated poor site soils) |
| Design Storm Capture Depth ($d_{des}$) = | 0.75 | inches |

Design Capture Volume (DCV) --> $DCV = A * (I*0.75 + 0.15) * (d_{des} - d_{eff}) * 43560\ ft^2/acre * 1/12\ in/ft$

**DCV = 202 $ft^3$**

48-Hour Effective Depth Calculation:

Max Draw Down Time (t) = 48 hours

48-Hour Effective Depth ($d_{48}$) --> $d_{48} = K_d * t * 1/12\ in/ft$

**$d_{48}$ = 1.2 ft**

Aggregate Reservoir Depth Calculation:

Aggregate Reservoir Fill Porosity ($n_R$) = 0.35

Depth of Trench Fill ($d_t$) = 1.5 ft (used a standard road section for base + subbase)

Aggregate Reservoir Depth ($d_R$) --> $d_R = n_R * d_t$

**$d_R$ = 0.53 ft**

$d_R$ **MUST BE** <= $d_{48}$

Required Infiltration Area Calculation:

Required Infiltration Area ($A_{req}$) --> $A_{req} = DCV / d_R$

**$A_{req}$ = 385 $ft^2$**

**Therefore, 500 $ft^2$ has been proposed as an added factor of safety in case the soils have less infiltration potential than estimated (See BMP Map in Appendix A).**

**Subsurface Detention Calculations**

The Subsurface Detention System is sized to mitigate the difference in the 50-yr event flows between the existing and proposed condition. Watershed B of the proposed condition is not included in the sizing calc as runoff from that area will not enter the subsurface detention system.

Refer to the following pages for the MODRAT outputs of the existing and proposed site runoff conditions.

Design Size:
8' Wide x 5' High by 385' Long Reinforced Concrete Box Subsurface Detention.

EXISTING CONDITION HYDROLOGY

File name: C:\WMS80\Trumark RPV\Existing\25-yr\Watershed A\RPV25_E_A.lac Run date: Wed Feb 08 10:35:08 2012

Los Angeles County Flood Control District
Modified Rational Method Hydrology

Storm Frequency 25

| LOCATION | | SUBAREA AREA | SUBAREA Q | TOTAL AREA | TOTAL Q | TOTAL VOLUME | CONV TYPE | CONV LNGTH | CONV SLOPE | CONV SIZE | CONV Z | CONTROL Q | SOIL NAME | TC | RAIN | PCT IMPV |
|---|---|---|---|---|---|---|---|---|---|---|---|---|---|---|---|---|
| 1 | 1A | 1.1 | 1.85 | 1.1 | 1.85 | 0.091 | 0 | 0 | 0.00000 | 0.00 | 0.00 | 0 | 4 | 6 | 4.30 | 0.10 |
| 1 | 2A | 0.0 | 0.00 | 1.1 | 1.85 | 0.033 | 3 | 66 | 0.08900 | 30-6 | 0.00 | 0 | 4 | 0 | 4.30 | 0.00 |
| 1 | 3A | 1.4 | 2.36 | 2.5 | 4.16 | 0.150 | 0 | 0 | 0.00000 | 0.00 | 0.00 | 0 | 4 | 6 | 4.30 | 0.10 |
| 1 | 4A | 0.0 | 0.00 | 2.5 | 4.16 | 0.078 | 3 | 263 | 0.09900 | 30-6 | 0.00 | 0 | 4 | 0 | 4.30 | 0.00 |
| 1 | 5A | 1.7 | 3.19 | 4.2 | 6.89 | 0.219 | 0 | 0 | 0.00000 | 0.00 | 0.00 | 0 | 4 | 5 | 4.30 | 0.10 |
| 1 | 6A | 0.0 | 0.00 | 4.2 | 6.89 | 0.219 | 0 | 0 | 0.00000 | 0.00 | 0.00 | 0 | 4 | 0 | 4.30 | 0.00 |

Normal End of MODRAT

EXISTING CONDITION HYDROLOGY

File name: C:\WMS80\Trumark RPV\Existing\25-yr\Watershed B\RPV25_E_B.lac Run date: Wed Feb 08 10:37:02 2012

Los Angeles County Flood Control District
Modified Rational Method Hydrology

Storm Frequency 25

| LOCATION | | SUBAREA AREA | SUBAREA Q | TOTAL AREA | TOTAL Q | TOTAL VOLUME | CONV TYPE | CONV LNGTH | CONV SLOPE | CONV SIZE | CONV Z | CONTROL Q | SOIL NAME | TC | RAIN | PCT IMPV |
|---|---|---|---|---|---|---|---|---|---|---|---|---|---|---|---|---|
| 1 | 1A | 2.2 | 3.38 | 2.2 | 3.38 | 0.183 | 0 | 0 | 0.00000 | 0.00 | 0.00 | 0 | 4 | 7 | 4.30 | 0.10 |
| 1 | 2A | 1.6 | 3.00 | 3.8 | 6.38 | 0.316 | 0 | 0 | 0.00000 | 0.00 | 0.00 | 0 | 4 | 5 | 4.30 | 0.10 |
| 1 | 3A | 1.7 | 3.19 | 5.5 | 9.56 | 0.457 | 0 | 0 | 0.00000 | 0.00 | 0.00 | 0 | 4 | 5 | 4.30 | 0.10 |
| 1 | 4A | 0.0 | 0.00 | 5.5 | 9.56 | 0.457 | 0 | 0 | 0.00000 | 0.00 | 0.00 | 0 | 4 | 0 | 4.30 | 0.00 |

Normal End of MODRAT

EXISTING CONDITION HYDROLOGY

File name: C:\WMS80\Trumark RPV\Existing\50-yr\Watershed A\RPV50_E_A.lac Run date: Wed Feb 08 10:38:44 2012

Los Angeles County Flood Control District
Modified Rational Method Hydrology

Storm Day 4 Storm Frequency 50

| LOCATION | | SUBAREA AREA | SUBAREA Q | TOTAL AREA | TOTAL Q | TOTAL VOLUME | CONV TYPE | CONV LNGTH | CONV SLOPE | CONV SIZE | CONV Z | CONTROL Q | SOIL NAME | TC | RAIN | PCT IMPV |
|---|---|---|---|---|---|---|---|---|---|---|---|---|---|---|---|---|
| 1 | 1A | 1.1 | 2.40 | 1.1 | 2.40 | 0.108 | 0 | 0 | 0.00000 | 0.00 | 0.00 | 0 | 4 | 5 | 4.90 | 0.10 |
| 1 | 2A | 0.0 | 0.00 | 1.1 | 2.40 | 0.044 | 3 | 66 | 0.08900 | 30-6 | 0.00 | 0 | 4 | 0 | 4.90 | 0.00 |
| 1 | 3A | 1.4 | 3.06 | 2.5 | 5.35 | 0.182 | 0 | 0 | 0.00000 | 0.00 | 0.00 | 0 | 4 | 5 | 4.90 | 0.10 |
| 1 | 4A | 0.0 | 0.00 | 2.5 | 5.35 | 0.103 | 3 | 263 | 0.09900 | 30-6 | 0.00 | 0 | 4 | 0 | 4.90 | 0.00 |
| 1 | 5A | 1.7 | 3.71 | 4.2 | 8.55 | 0.270 | 0 | 0 | 0.00000 | 0.00 | 0.00 | 0 | 4 | 5 | 4.90 | 0.10 |
| 1 | 6A | 0.0 | 0.00 | 4.2 | 8.55 | 0.270 | 0 | 0 | 0.00000 | 0.00 | 0.00 | 0 | 4 | 0 | 4.90 | 0.00 |

Normal End of MODRAT

EXISTING CONDITION HYDROLOGY

File name: C:\WMS80\Trumark RPV\Existing\50-yr\Watershed B\RPV50_E_B.lac Run date: Wed Feb 08 10:43:09 2012

Los Angeles County Flood Control District
Modified Rational Method Hydrology

Storm Frequency 50

| LOCATION | | SUBAREA AREA | SUBAREA Q | TOTAL AREA | TOTAL Q | TOTAL VOLUME | CONV TYPE | CONV LNGTH | CONV SLOPE | CONV SIZE | CONV Z | CONTROL Q | SOIL NAME | TC | RAIN | PCT IMPV |
|---|---|---|---|---|---|---|---|---|---|---|---|---|---|---|---|---|
| 1 | 1A | 2.2 | 4.34 | 2.2 | 4.34 | 0.216 | 0 | 0 | 0.00000 | 0.00 | 0.00 | 0 | 4 | 6 | 4.90 | 0.10 |
| 1 | 2A | 1.6 | 3.49 | 3.8 | 7.83 | 0.374 | 0 | 0 | 0.00000 | 0.00 | 0.00 | 0 | 4 | 5 | 4.90 | 0.10 |
| 1 | 3A | 1.7 | 3.71 | 5.5 | 11.55 | 0.541 | 0 | 0 | 0.00000 | 0.00 | 0.00 | 0 | 4 | 5 | 4.90 | 0.10 |
| 1 | 4A | 0.0 | 0.00 | 5.5 | 11.55 | 0.541 | 0 | 0 | 0.00000 | 0.00 | 0.00 | 0 | 4 | 0 | 4.90 | 0.00 |

Normal End of MODRAT

PROPOSED CONDITION HYDROLOGY

File name: C:\WMS80\Trumark RPV\Proposed\25-yr\Watershed A\RPV25_P_A.lac Run date: Thu Feb 16 17:25:55 2012

Los Angeles County Flood Control District
Modified Rational Method Hydrology

Storm Frequency 25

| LOCATION | | SUBAREA AREA | SUBAREA Q | TOTAL AREA | TOTAL Q | TOTAL VOLUME | CONV TYPE | CONV LNGTH | CONV SLOPE | CONV SIZE | CONV Z | CONTROL Q | SOIL NAME | TC | RAIN | PCT IMPV |
|---|---|---|---|---|---|---|---|---|---|---|---|---|---|---|---|---|
| 1 | 1A | 0.4 | 0.84 | 0.4 | 0.84 | 0.080 | 0 | 0 | 0.00000 | 0.00 | 0.00 | 0 | 4 | 5 | 4.30 | 0.55 |
| 1 | 2A | 0.0 | 0.00 | 0.4 | 0.84 | 0.017 | 3 | 182 | 0.03300 | 30-6 | 0.00 | 0 | 4 | 0 | 4.30 | 0.00 |
| 1 | 3A | 0.7 | 1.08 | 1.1 | 1.84 | 0.075 | 0 | 0 | 0.00000 | 0.00 | 0.00 | 0 | 4 | 7 | 4.30 | 0.10 |
| 1 | 4A | 0.0 | 0.00 | 1.1 | 1.84 | 0.075 | 0 | 0 | 0.00000 | 0.00 | 0.00 | 0 | 4 | 0 | 4.30 | 0.00 |

Normal End of MODRAT

PROPOSED CONDITION HYDROLOGY

File name: C:\WMS80\Trumark RPV\Proposed\25-yr\Watershed B\RPV25_P_B.lac Run date: Wed Feb 08 10:52:25 2012

Los Angeles County Flood Control District
Modified Rational Method Hydrology

Storm Day 4 Storm Frequency 25

| LOCATION | | SUBAREA AREA | SUBAREA Q | TOTAL AREA | TOTAL Q | TOTAL VOLUME | CONV TYPE | CONV LNGTH | CONV SLOPE | CONV SIZE | CONV Z | CONTROL Q | SOIL NAME | TC | RAIN | PCT IMPV |
|---|---|---|---|---|---|---|---|---|---|---|---|---|---|---|---|---|
| 1 | 1A | 1.3 | 2.44 | 1.3 | 2.44 | 0.108 | 0 | 0 | 0.00000 | 0.00 | 0.00 | 0 | 4 | 5 | 4.30 | 0.10 |
| 1 | 2A | 0.3 | 0.56 | 1.6 | 3.00 | 0.133 | 0 | 0 | 0.00000 | 0.00 | 0.00 | 0 | 4 | 5 | 4.30 | 0.10 |
| 1 | 3A | 1.0 | 1.87 | 2.6 | 4.87 | 0.216 | 0 | 0 | 0.00000 | 0.00 | 0.00 | 0 | 4 | 5 | 4.30 | 0.10 |
| 1 | 4A | 0.0 | 0.00 | 2.6 | 4.87 | 0.216 | 0 | 0 | 0.00000 | 0.00 | 0.00 | 0 | 4 | 0 | 4.30 | 0.00 |

Normal End of MODRAT

PROPOSED CONDITION HYDROLOGY

| | | | | | | | | | | | | | | | | |
|---|---|---|---|---|---|---|---|---|---|---|---|---|---|---|---|---|
| 1 | 2A | 0.0 | 0.00 | 0.0 | 0.00 | 0.000 | 3 | 179 | 0.02000 | 30-6 | 0.00 | 0 | 2 | 0 | 0.75 | 0.00 |
| 1 | 4A | 0.0 | 0.00 | 0.0 | 0.00 | 0.000 | 3 | 140 | 0.02000 | 30-6 | 0.00 | 0 | 2 | 0 | 0.75 | 0.00 |
| 1 | 6A | 0.0 | 0.00 | 0.0 | 0.00 | 0.000 | 3 | 353 | 0.02000 | 30-6 | 0.00 | 0 | 2 | 0 | 0.75 | 0.00 |
| 1 | 7A | 0.9 | 1.88 | 0.9 | 1.88 | 0.181 | 0 | 0 | 0.00000 | 0.00 | 0.00 | 0 | 4 | 5 | 4.30 | 0.55 |
| 1 | 8A | 0.5 | 1.05 | 1.4 | 2.93 | 0.282 | 0 | 0 | 0.00000 | 0.00 | 0.00 | 0 | 4 | 5 | 4.30 | 0.55 |
| 1 | 13B | 0.4 | 0.84 | 0.4 | 0.84 | 0.081 | 0 | 0 | 0.00000 | 0.00 | 0.00 | 0 | 4 | 5 | 4.30 | 0.55 |
| 1 | 14B | 0.0 | 0.00 | 0.4 | 0.84 | 0.017 | 3 | 134 | 0.03000 | 30-6 | 0.00 | 0 | 4 | 0 | 4.30 | 0.00 |
| 1 | 15B | 0.3 | 0.63 | 0.7 | 1.39 | 0.077 | 0 | 0 | 0.00000 | 0.00 | 0.00 | 0 | 4 | 5 | 4.30 | 0.55 |
| 1 | 16B | 0.0 | 0.00 | 0.7 | 1.39 | 0.030 | 3 | 329 | 0.03000 | 30-6 | 0.00 | 0 | 4 | 0 | 4.30 | 0.00 |
| 1 | 17B | 0.9 | 1.39 | 1.6 | 2.50 | 0.211 | 0 | 0 | 0.00000 | 0.00 | 0.00 | 0 | 4 | 9 | 4.30 | 0.55 |
| 1 | 18B | 0.6 | 1.14 | 2.2 | 3.45 | 0.332 | 0 | 0 | 0.00000 | 0.00 | 0.00 | 0 | 4 | 6 | 4.30 | 0.55 |
| 1 | 19B | 0.0 | 0.00 | 2.2 | 3.45 | 0.258 | 3 | 239 | 0.03000 | 30-6 | 0.00 | 0 | 4 | 0 | 4.30 | 0.00 |
| 1 | 20B | 0.6 | 1.05 | 2.8 | 4.21 | 0.379 | 0 | 0 | 0.00000 | 0.00 | 0.00 | 0 | 4 | 7 | 4.30 | 0.55 |
| 1 | 21B | 0.3 | 0.63 | 3.1 | 4.62 | 0.440 | 0 | 0 | 0.00000 | 0.00 | 0.00 | 0 | 4 | 5 | 4.30 | 0.55 |
| 1 | 22B | 0.4 | 0.76 | 3.5 | 5.28 | 0.520 | 0 | 0 | 0.00000 | 0.00 | 0.00 | 0 | 4 | 6 | 4.30 | 0.55 |
| 1 | 23B | 0.2 | 0.42 | 3.7 | 5.61 | 0.560 | 0 | 0 | 0.00000 | 0.00 | 0.00 | 0 | 4 | 5 | 4.30 | 0.55 |

**********

* CONFLUENCE Q'S *

* 1 24A TA 1153 QA 2.93 QAB 7.83 QB 4.90 1 24B TB 1156 QB 5.61 QB 0.00 QÙA 2.29 Q 1.#R

* 1 24AB TAB 1155 QAB 8.23 QA 2.65 QB 5.59

**********

| LOCATION | | SUBAREA AREA | SUBAREA Q | TOTAL AREA | TOTAL Q | TOTAL VOLUME | CONV TYPE | CONV LNGTH | CONV SLOPE | CONV SIZE | CONV Z | CONTROL Q | SOIL NAME | TC | RAIN | PCT IMPV |
|---|---|---|---|---|---|---|---|---|---|---|---|---|---|---|---|---|
| 1 | 24AB | 3.7 | 5.61 | 5.1 | 8.23 | 0.842 | 4 | 78 | 0.03000 | 2.00 | 0.00 | 0 | 4 | 0 | 4.30 | 0.00 |
| 1 | 25A | 0.2 | 0.42 | 5.3 | 8.61 | 0.882 | 0 | 0 | 0.00000 | 0.00 | 0.00 | 0 | 4 | 5 | 4.30 | 0.55 |
| 1 | 26A | 0.7 | 1.15 | 6.0 | 9.73 | 1.023 | 0 | 0 | 0.00000 | 0.00 | 0.00 | 0 | 4 | 8 | 4.30 | 0.55 |
| 1 | 27A | 0.0 | 0.00 | 6.0 | 9.73 | 1.023 | 0 | 0 | 0.00000 | 0.00 | 0.00 | 0 | 4 | 0 | 4.30 | 0.00 |

Normal End of MODRAT

PROPOSED CONDITION HYDROLOGY

File name: C:\WMS80\Trumark RPV\Proposed\50-yr\Watershed A\RPV_50_P_A.lac Run date: Thu Feb 16 17:27:22 2012

Los Angeles County Flood Control District
Modified Rational Method Hydrology

Storm Frequency 50

| LOCATION | | SUBAREA AREA | SUBAREA Q | TOTAL AREA | TOTAL Q | TOTAL VOLUME | CONV TYPE | CONV LNGTH | CONV SLOPE | CONV SIZE | CONV Z | CONTROL Q | SOIL NAME | TC | RAIN | PCT IMPV |
|---|---|---|---|---|---|---|---|---|---|---|---|---|---|---|---|---|
| 1 | 1A | 0.4 | 0.96 | 0.4 | 0.96 | 0.092 | 0 | 0 | 0.00000 | 0.00 | 0.00 | 0 | 4 | 5 | 4.90 | 0.55 |
| 1 | 2A | 0.0 | 0.00 | 0.4 | 0.96 | 0.023 | 3 | 182 | 0.03300 | 30-6 | 0.00 | 0 | 4 | 0 | 4.90 | 0.00 |
| 1 | 3A | 0.7 | 1.38 | 1.1 | 2.23 | 0.091 | 0 | 0 | 0.00000 | 0.00 | 0.00 | 0 | 4 | 6 | 4.90 | 0.10 |
| 1 | 4A | 0.0 | 0.00 | 1.1 | 2.23 | 0.091 | 0 | 0 | 0.00000 | 0.00 | 0.00 | 0 | 4 | 0 | 4.90 | 0.00 |

Normal End of MODRAT

PROPOSED CONDITION HYDROLOGY

File name: C:\WMS80\Trumark RPV\Proposed\50-yr\Watershed B\RPV50_P_B.lac Run date: Wed Feb 08 10:47:06 2012

Los Angeles County Flood Control District
Modified Rational Method Hydrology

Storm Day 4 Storm Frequency 50

| LOCATION | | SUBAREA AREA | SUBAREA Q | TOTAL AREA | TOTAL Q | TOTAL VOLUME | CONV TYPE | CONV LNGTH | CONV SLOPE | CONV SIZE | CONV Z | CONTROL Q | SOIL NAME | TC | RAIN | PCT IMPV |
|---|---|---|---|---|---|---|---|---|---|---|---|---|---|---|---|---|
| 1 | 1A | 1.3 | 2.84 | 1.3 | 2.84 | 0.128 | 0 | 0 | 0.00000 | 0.00 | 0.00 | 0 | 4 | 5 | 4.90 | 0.10 |
| 1 | 2A | 0.3 | 0.66 | 1.6 | 3.49 | 0.157 | 0 | 0 | 0.00000 | 0.00 | 0.00 | 0 | 4 | 5 | 4.90 | 0.10 |
| 1 | 3A | 1.0 | 2.18 | 2.6 | 5.68 | 0.256 | 0 | 0 | 0.00000 | 0.00 | 0.00 | 0 | 4 | 5 | 4.90 | 0.10 |
| 1 | 4A | 0.0 | 0.00 | 2.6 | 5.68 | 0.256 | 0 | 0 | 0.00000 | 0.00 | 0.00 | 0 | 4 | 0 | 4.90 | 0.00 |

Normal End of MODRAT

PROPOSED CONDITION HYDROLOGY

| | | | | | | | | | | | | | | | | |
|---|---|---|---|---|---|---|---|---|---|---|---|---|---|---|---|---|
| 1 | 2A | 0.0 | 0.00 | 0.0 | 0.00 | 0.000 | 3 | 179 | 0.02000 | 30-6 | 0.00 | 0 | 2 | 0 | 4.30 | 0.00 |
| 1 | 4A | 0.0 | 0.00 | 0.0 | 0.00 | 0.000 | 3 | 140 | 0.02000 | 30-6 | 0.00 | 0 | 2 | 0 | 4.30 | 0.00 |
| 1 | 6A | 0.0 | 0.00 | 0.0 | 0.00 | 0.000 | 3 | 353 | 0.02000 | 30-6 | 0.00 | 0 | 2 | 0 | 4.30 | 0.00 |
| 1 | 7A | 0.5 | 1.20 | 0.5 | 1.20 | 0.116 | 0 | 0 | 0.00000 | 0.00 | 0.00 | 0 | 4 | 5 | 4.90 | 0.55 |
| 1 | 8A | 0.9 | 2.17 | 1.4 | 3.37 | 0.324 | 0 | 0 | 0.00000 | 0.00 | 0.00 | 0 | 4 | 5 | 4.90 | 0.55 |
| 1 | 13B | 0.4 | 0.96 | 0.4 | 0.96 | 0.093 | 0 | 0 | 0.00000 | 0.00 | 0.00 | 0 | 4 | 5 | 4.90 | 0.55 |
| 1 | 14B | 0.0 | 0.00 | 0.4 | 0.96 | 0.023 | 3 | 134 | 0.03000 | 30-6 | 0.00 | 0 | 4 | 0 | 4.90 | 0.00 |
| 1 | 15B | 0.3 | 0.72 | 0.7 | 1.61 | 0.092 | 0 | 0 | 0.00000 | 0.00 | 0.00 | 0 | 4 | 5 | 4.90 | 0.55 |
| 1 | 16B | 0.0 | 0.00 | 0.7 | 1.61 | 0.040 | 3 | 329 | 0.03000 | 30-6 | 0.00 | 0 | 4 | 0 | 4.90 | 0.00 |
| 1 | 17B | 0.9 | 1.70 | 1.6 | 2.92 | 0.248 | 0 | 0 | 0.00000 | 0.00 | 0.00 | 0 | 4 | 8 | 4.90 | 0.55 |
| 1 | 18B | 0.6 | 1.32 | 2.2 | 4.04 | 0.386 | 0 | 0 | 0.00000 | 0.00 | 0.00 | 0 | 4 | 6 | 4.90 | 0.55 |
| 1 | 19B | 0.0 | 0.00 | 2.2 | 4.04 | 0.342 | 3 | 239 | 0.03000 | 30-6 | 0.00 | 0 | 4 | 0 | 4.90 | 0.00 |
| 1 | 20B | 0.2 | 0.48 | 2.4 | 4.16 | 0.388 | 0 | 0 | 0.00000 | 0.00 | 0.00 | 0 | 4 | 5 | 4.90 | 0.55 |
| 1 | 21B | 0.4 | 0.88 | 2.8 | 4.93 | 0.480 | 0 | 0 | 0.00000 | 0.00 | 0.00 | 0 | 4 | 6 | 4.90 | 0.55 |
| 1 | 22B | 0.3 | 0.72 | 3.1 | 5.49 | 0.550 | 0 | 0 | 0.00000 | 0.00 | 0.00 | 0 | 4 | 5 | 4.90 | 0.55 |
| 1 | 23B | 0.6 | 1.32 | 3.7 | 6.67 | 0.688 | 0 | 0 | 0.00000 | 0.00 | 0.00 | 0 | 4 | 6 | 4.90 | 0.55 |

**********

* CONFLUENCE Q'S *

* 1 24A TA 1153 QA 3.37 QAB 9.24 QB 5.87 1 24B TB 1155 QB 6.67 QB-5178235523661898500000000000000000000000

* 1 24AB TAB 1155 QAB 9.72 QA 3.05 QB 6.67

**********

| LOCATION | | SUBAREA AREA | SUBAREA Q | TOTAL AREA | TOTAL Q | TOTAL VOLUME | CONV TYPE | CONV LNGTH | CONV SLOPE | CONV SIZE | CONV Z | CONTROL Q | SOIL NAME | TC | RAIN | PCT IMPV |
|---|---|---|---|---|---|---|---|---|---|---|---|---|---|---|---|---|
| 1 | 24AB | 3.7 | 6.67 | 5.1 | 9.72 | 1.012 | 4 | 78 | 0.03000 | 2.00 | 0.00 | 0 | 4 | 0 | 4.90 | 0.00 |
| 1 | 25A | 0.2 | 0.48 | 5.3 | 10.15 | 1.058 | 0 | 0 | 0.00000 | 0.00 | 0.00 | 0 | 4 | 5 | 4.90 | 0.55 |
| 1 | 26A | 0.7 | 1.32 | 6.0 | 11.45 | 1.220 | 0 | 0 | 0.00000 | 0.00 | 0.00 | 0 | 4 | 8 | 4.90 | 0.55 |
| 1 | 27A | 0.0 | 0.00 | 6.0 | 11.45 | 1.220 | 0 | 0 | 0.00000 | 0.00 | 0.00 | 0 | 4 | 0 | 4.90 | 0.00 |

Normal End of MODRAT

PROPOSED CONDITION HYDROLOGY

| | | | | | | | | | | | | | | | | |
|---|---|---|---|---|---|---|---|---|---|---|---|---|---|---|---|---|
| 1 | 2A | 0.0 | 0.00 | 0.0 | 0.00 | 0.000 | 3 | 179 | 0.02000 | 30-6 | 0.00 | 0 | 2 | 0 | 4.90 | 0.00 |
| 1 | 4A | 0.0 | 0.00 | 0.0 | 0.00 | 0.000 | 3 | 140 | 0.02000 | 30-6 | 0.00 | 0 | 2 | 0 | 4.90 | 0.00 |
| 1 | 6A | 0.0 | 0.00 | 0.0 | 0.00 | 0.000 | 3 | 353 | 0.02000 | 30-6 | 0.00 | 0 | 2 | 0 | 4.90 | 0.00 |
| 1 | 7A | 0.9 | 1.88 | 0.9 | 1.88 | 0.181 | 0 | 0 | 0.00000 | 0.00 | 0.00 | 0 | 4 | 5 | 4.30 | 0.55 |
| 1 | 8A | 0.5 | 1.05 | 1.4 | 2.93 | 0.282 | 0 | 0 | 0.00000 | 0.00 | 0.00 | 0 | 4 | 5 | 4.30 | 0.55 |
| 1 | 13B | 0.4 | 0.84 | 0.4 | 0.84 | 0.081 | 0 | 0 | 0.00000 | 0.00 | 0.00 | 0 | 4 | 5 | 4.30 | 0.55 |
| 1 | 14B | 0.0 | 0.00 | 0.4 | 0.84 | 0.017 | 3 | 134 | 0.03000 | 30-6 | 0.00 | 0 | 4 | 0 | 4.30 | 0.00 |
| 1 | 15B | 0.3 | 0.63 | 0.7 | 1.39 | 0.077 | 0 | 0 | 0.00000 | 0.00 | 0.00 | 0 | 4 | 5 | 4.30 | 0.55 |
| 1 | 16B | 0.0 | 0.00 | 0.7 | 1.39 | 0.030 | 3 | 329 | 0.03000 | 30-6 | 0.00 | 0 | 4 | 0 | 4.30 | 0.00 |
| 1 | 17B | 0.9 | 1.39 | 1.6 | 2.50 | 0.211 | 0 | 0 | 0.00000 | 0.00 | 0.00 | 0 | 4 | 9 | 4.30 | 0.55 |
| 1 | 18B | 0.6 | 1.14 | 2.2 | 3.45 | 0.332 | 0 | 0 | 0.00000 | 0.00 | 0.00 | 0 | 4 | 6 | 4.30 | 0.55 |
| 1 | 19B | 0.0 | 0.00 | 2.2 | 3.45 | 0.258 | 3 | 239 | 0.03000 | 30-6 | 0.00 | 0 | 4 | 0 | 4.30 | 0.00 |
| 1 | 20B | 0.6 | 1.05 | 2.8 | 4.21 | 0.379 | 0 | 0 | 0.00000 | 0.00 | 0.00 | 0 | 4 | 7 | 4.30 | 0.55 |
| 1 | 21B | 0.3 | 0.63 | 3.1 | 4.62 | 0.440 | 0 | 0 | 0.00000 | 0.00 | 0.00 | 0 | 4 | 5 | 4.30 | 0.55 |
| 1 | 22B | 0.4 | 0.76 | 3.5 | 5.28 | 0.520 | 0 | 0 | 0.00000 | 0.00 | 0.00 | 0 | 4 | 6 | 4.30 | 0.55 |
| 1 | 23B | 0.2 | 0.42 | 3.7 | 5.61 | 0.560 | 0 | 0 | 0.00000 | 0.00 | 0.00 | 0 | 4 | 5 | 4.30 | 0.55 |

**********

* CONFLUENCE Q'S *

* 1 24A TA 1153 QA 2.93 QAB 7.83 QB 4.90 1 24B TB 1156 QB 5.61 QB 0.00 QùA 2.29 Q 1.#R

* 1 24AB TAB 1155 QAB 8.23 QA 2.65 QB 5.59

**********

| LOCATION | | SUBAREA AREA | SUBAREA Q | TOTAL AREA | TOTAL Q | TOTAL VOLUME | CONV TYPE | CONV LNGTH | CONV SLOPE | CONV SIZE | CONV Z | CONTROL Q | SOIL NAME | TC | RAIN | PCT IMPV |
|---|---|---|---|---|---|---|---|---|---|---|---|---|---|---|---|---|
| 1 | 24AB | 3.7 | 5.61 | 5.1 | 3.67 | 0.838 | 4 | 78 | 0.03000 | 2.00 | 0.00 | 0 | 4 | 0 | 4.30 | 0.00 |
| 1 | 25A | 0.2 | 0.42 | 5.3 | 3.74 | 0.878 | 0 | 0 | 0.00000 | 0.00 | 0.00 | 0 | 4 | 5 | 4.30 | 0.55 |
| 1 | 26A | 0.7 | 1.15 | 6.0 | 4.68 | 1.019 | 0 | 0 | 0.00000 | 0.00 | 0.00 | 0 | 4 | 8 | 4.30 | 0.55 |
| 1 | 27A | 0.0 | 0.00 | 6.0 | 4.68 | 1.019 | 0 | 0 | 0.00000 | 0.00 | 0.00 | 0 | 4 | 0 | 4.30 | 0.00 |

Normal End of MODRAT

| | | | | | | | | | | | | | | | | |
|---|---|---|---|---|---|---|---|---|---|---|---|---|---|---|---|---|
| 1 | 2A | 0.0 | 0.00 | 0.0 | 0.00 | 0.000 | 3 | 179 | 0.02000 | 30-6 | 0.00 | 0 | 2 | 0 | 0.75 | 0.00 |
| 1 | 4A | 0.0 | 0.00 | 0.0 | 0.00 | 0.000 | 3 | 140 | 0.02000 | 30-6 | 0.00 | 0 | 2 | 0 | 0.75 | 0.00 |
| 1 | 6A | 0.0 | 0.00 | 0.0 | 0.00 | 0.000 | 3 | 353 | 0.02000 | 30-6 | 0.00 | 0 | 2 | 0 | 0.75 | 0.00 |
| 1 | 7A | 0.5 | 1.20 | 0.5 | 1.20 | 0.116 | 0 | 0 | 0.00000 | 0.00 | 0.00 | 0 | 4 | 5 | 4.90 | 0.55 |
| 1 | 8A | 0.9 | 2.17 | 1.4 | 3.37 | 0.324 | 0 | 0 | 0.00000 | 0.00 | 0.00 | 0 | 4 | 5 | 4.90 | 0.55 |
| 1 | 13B | 0.4 | 0.96 | 0.4 | 0.96 | 0.093 | 0 | 0 | 0.00000 | 0.00 | 0.00 | 0 | 4 | 5 | 4.90 | 0.55 |
| 1 | 14B | 0.0 | 0.00 | 0.4 | 0.96 | 0.023 | 3 | 134 | 0.03000 | 30-6 | 0.00 | 0 | 4 | 0 | 4.90 | 0.00 |
| 1 | 15B | 0.3 | 0.72 | 0.7 | 1.61 | 0.092 | 0 | 0 | 0.00000 | 0.00 | 0.00 | 0 | 4 | 5 | 4.90 | 0.55 |
| 1 | 16B | 0.0 | 0.00 | 0.7 | 1.61 | 0.040 | 3 | 329 | 0.03000 | 30-6 | 0.00 | 0 | 4 | 0 | 4.90 | 0.00 |
| 1 | 17B | 0.9 | 1.70 | 1.6 | 2.92 | 0.248 | 0 | 0 | 0.00000 | 0.00 | 0.00 | 0 | 4 | 8 | 4.90 | 0.55 |
| 1 | 18B | 0.6 | 1.32 | 2.2 | 4.04 | 0.386 | 0 | 0 | 0.00000 | 0.00 | 0.00 | 0 | 4 | 6 | 4.90 | 0.55 |
| 1 | 19B | 0.0 | 0.00 | 2.2 | 4.04 | 0.342 | 3 | 239 | 0.03000 | 30-6 | 0.00 | 0 | 4 | 0 | 4.90 | 0.00 |
| 1 | 20B | 0.2 | 0.48 | 2.4 | 4.16 | 0.388 | 0 | 0 | 0.00000 | 0.00 | 0.00 | 0 | 4 | 5 | 4.90 | 0.55 |
| 1 | 21B | 0.4 | 0.88 | 2.8 | 4.93 | 0.480 | 0 | 0 | 0.00000 | 0.00 | 0.00 | 0 | 4 | 6 | 4.90 | 0.55 |
| 1 | 22B | 0.3 | 0.72 | 3.1 | 5.49 | 0.550 | 0 | 0 | 0.00000 | 0.00 | 0.00 | 0 | 4 | 5 | 4.90 | 0.55 |
| 1 | 23B | 0.6 | 1.32 | 3.7 | 6.67 | 0.688 | 0 | 0 | 0.00000 | 0.00 | 0.00 | 0 | 4 | 6 | 4.90 | 0.55 |

**********

*  CONFLUENCE Q'S  *

* 1  24A  TA 1153 QA  3.37 QAB  9.24 QB  5.87  1  24B  TB 1155 QB  6.67 QB-5178235523661898500000000000000000000000

*  1  24AB TAB 1155 QAB  9.72 QA  3.05 QB  6.67

**********

| LOCATION | | SUBAREA AREA | SUBAREA Q | TOTAL AREA | TOTAL Q | TOTAL VOLUME | CONV TYPE | CONV LNGTH | CONV SLOPE | CONV SIZE | CONV Z | CONTROL Q | SOIL NAME | TC | RAIN | PCT IMPV |
|---|---|---|---|---|---|---|---|---|---|---|---|---|---|---|---|---|
| 1 | 24AB | 3.7 | 6.67 | 5.1 | 4.22 | 1.008 | 4 | 78 | 0.03000 | 2.00 | 0.00 | 0 | 4 | 0 | 4.90 | 0.00 |
| 1 | 25A | 0.2 | 0.48 | 5.3 | 4.30 | 1.055 | 0 | 0 | 0.00000 | 0.00 | 0.00 | 0 | 4 | 5 | 4.90 | 0.55 |
| 1 | 26A | 0.7 | 1.32 | 6.0 | 5.40 | 1.216 | 0 | 0 | 0.00000 | 0.00 | 0.00 | 0 | 4 | 8 | 4.90 | 0.55 |
| 1 | 27A | 0.0 | 0.00 | 6.0 | 5.40 | 1.216 | 0 | 0 | 0.00000 | 0.00 | 0.00 | 0 | 4 | 0 | 4.90 | 0.00 |

Normal End of MODRAT

# Filterra® Overview
# Stormwater Bioretention Filtration System

Save valuable space with small footprint for urban sites

Improve BMP aesthetics with attractive trees or shrubs

Reduce lifetime cost with safer and less expensive maintenance

Remove Pollutants and Comply with NPDES

Filterra® is well-suited for the ultra-urban environment with high removal efficiencies for many pollutants such as petroleum, heavy metals, phosphorus, nitrogen, TSS and bacteria. Filterra® is similar in concept to bioretention in its function and applications, with the major distinction that Filterra® has been optimized for high volume/flow treatment and high pollutant removal. It takes up little space (often 0.2% Filter Surface Area/Drainage Area) and may be used on highly developed sites such as landscaped areas, green space, parking lots and streetscapes. Filterra® is exceedingly adaptable and is the urban solution for Low Impact Development.

Stormwater flows through a specially designed filter media mixture contained in a landscaped concrete container. The filter media captures and immobilizes pollutants; those pollutants are then decomposed, volatilized and incorporated into the biomass of the Filterra® system's micro/macro fauna and flora. Stormwater runoff flows through the media and into an underdrain system at the bottom of the container, where the treated water is discharged. Higher flows bypass the Filterra® via a downstream inlet structure, curb cut or other appropriate relief.

Expected Average Pollutant Removal Rates
(Ranges Varying with Particle Size, Pollutant Loading and Site Conditions)

| | |
|---|---|
| TSS Removal | 85% |
| Phosphorous Removal | 73% |
| Nitrogen Removal | 43% |
| Heavy Metal Removal | 33% - 82% |
| Fecal Coliform | 57% - 76% * |
| Predicted Oil & Grease | > 85% |

* Standard Blend

# Design Guidelines for Using Filterra®

1. Do not place in a sump condition. The Filterra® cannot be used as a stand alone inlet – it will need effective bypass during higher intensity rainfall events.

   Plans MUST show Filterra® Top Curb (TC) and Flow Line (FL) spot elevations and also bypass TC (where applicable) and bypass FL spot elevations.

   The Filterra® TC and FL elevations MUST be higher than the bypass TC and FL elevations for effective bypass. Use Drawing FLP-2 (p.24) as a detail on the project plans.

2. For proper trash collection ensure a minimum 4" and maximum 6" Filterra® throat opening depth and use Drawing CGT-04 (p.25) as a detail on the project plans.

3. Do not direct surface flow to the Filterra® in a "head-on" configuration. Refer to Guidelines GU1-A (p.12) and GU2 (p.13) for grading design that encourages flow to enter a Filterra® in a cross linear flow – left-to-right or right to-left in the gutter in front of the throat, as per a wet curb which prevents system damage. During extreme storm events the excess flow should continue past the Filterra® to a bypass inlet or other means of relief. Guideline GU3, Parking Lot Corners, shows common situations (p.14).

4. To calculate which size Filterra® is required, use Table 1, Filterra® Quick Sizing Table, appropriate to the project's geographical region and target treatment regime (p.11). The entire contributing drainage area to the Filterra® should be considered and the minimum allowable C factors noted. The maximum contributing drainage area will vary with site conditions. For further information relating to sizing, please contact Filterra.

5. To ensure correct installation, include the Standard Filterra® Plan Notes (p.26-27) on your Filterra® detail project sheet, as well as detailed drawings FLP-2 and CGT-4 (p.24,25).

6. Positive drainage of each Filterra® unit's effluent treatment pipe is required to prevent free standing water from accumulating in the system or underdrain. This could occur due to tidal influences or improper connection of Filterra's effluent pipe to a bypass structure or other outfall.

7. **Send plans and the completed Filterra® Project Information Form** (p.9) to Americast for Filterra® placement review. Plan sheets should include grading, drainage areas, stormwater schedules or profiles, landscape sheets and Filterra® detail sheets. THIS REVIEW IS MANDATORY for warranty to apply and helps ensure that each Filterra® system operates efficiently to maximize performance and minimize maintenance. Our staff also looks for value engineering opportunities.

Methods of sending information for review are as follows:

E-mail: design@filterra.com, or upload to ftp site
AutoCAD or PDF files
Fax: (951) 359-3439
Toll Free: (866) 349-3458

Mail or other:
Filterra Review
3380 La Sierra Ave., Suite 104-284
Riverside, CA 92503

# GRADING AND GUTTER FLOW

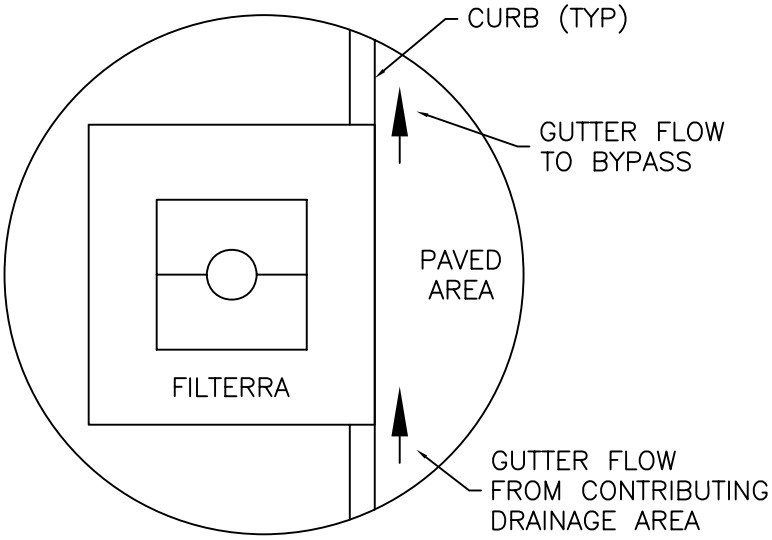


## GUTTER FLOW

GRADING AND CURB AND GUTTER SHOULD BE SUCH THAT GUTTER FLOW APPROACHES THE FILTERRA FROM ONE SIDE OF THE THROAT AND FLOWS AWAY FROM THE FILTERRA ON THE OPPOSITE SIDE DURING EXTREME STORM EVENTS. DESIGN OR INSTALLATION SUCH THAT FLOW APPROACHES FROM BOTH SIDES WILL RESULT IN SITE MAINTENANCE ISSUES AND VOID MANUFACTURER'S MAINTENANCE PROGRAM AND WARRANTY.

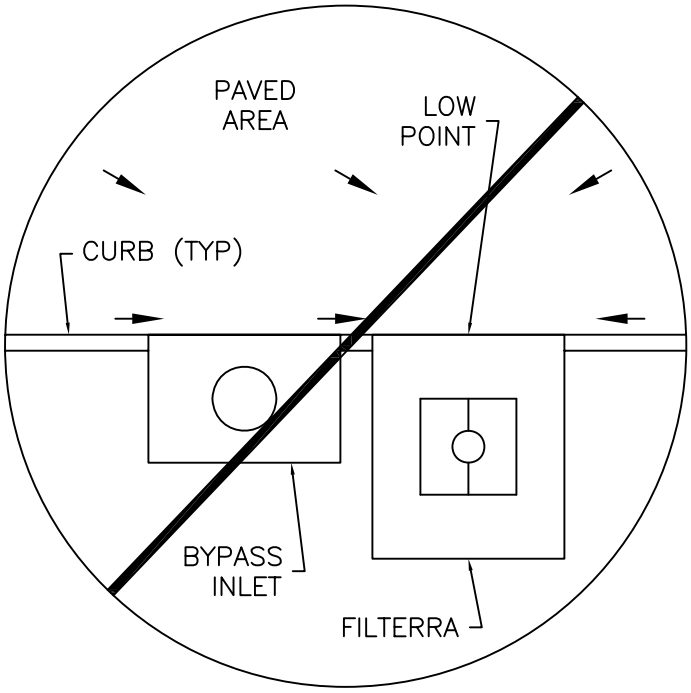


## INCORRECT

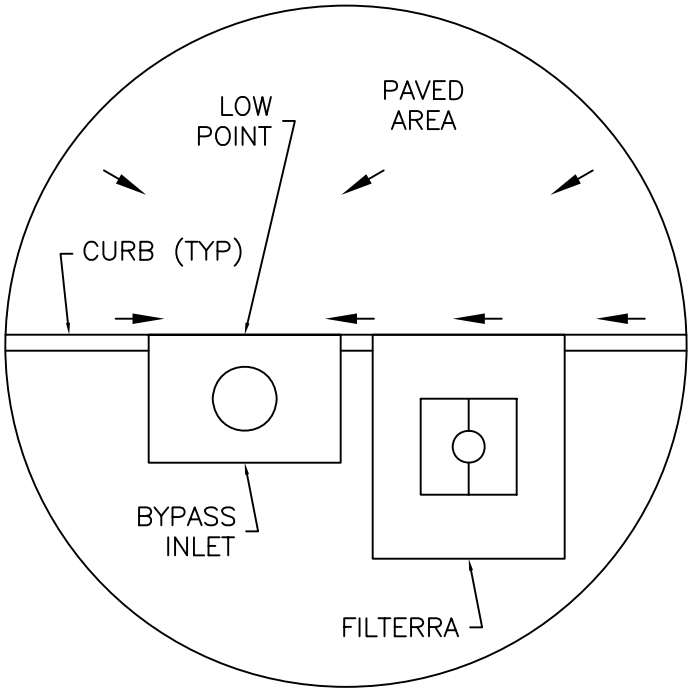


## CORRECT

MODIFICATIONS OF DRAWINGS ARE ONLY PERMITTED BY WRITTEN AUTHORIZATION FROM FILTERRA

AMERICAST®

Copyright © 2007 by Americast

| DATE: 12–21–04 | DWG: GU1 |
|---|---|

**FILTERRA® GUIDELINES**
**GRADING AND GUTTER FLOW**

filterra®

US PAT 6,277,274 AND 6,569,321

# AVOID "HEAD-ON" GUTTER FLOW

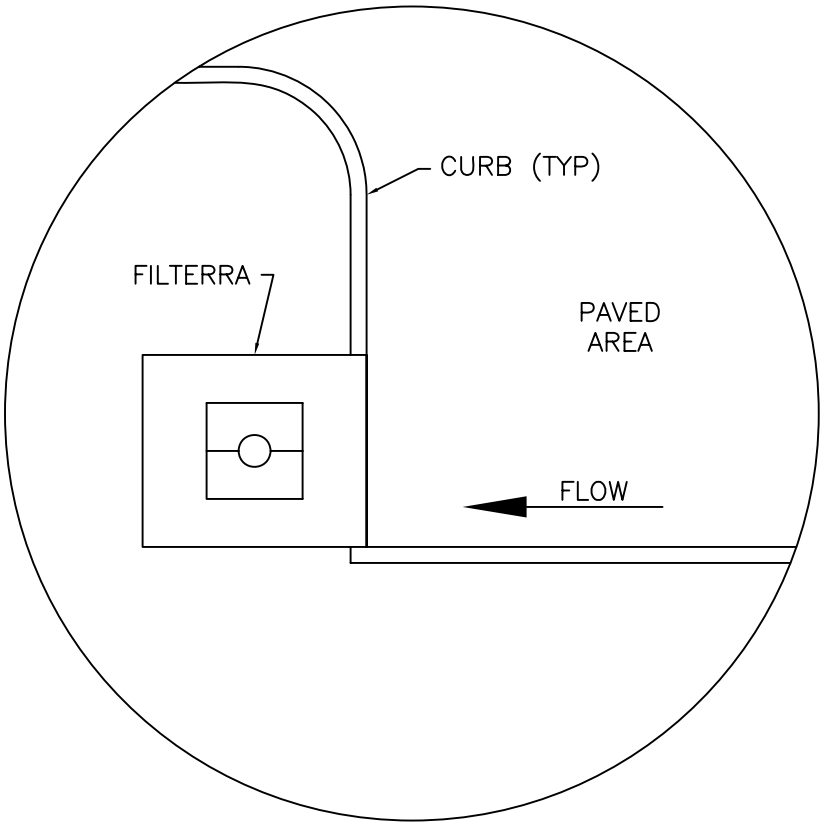


## PROBLEM

FLOW FROM THE ADJACENT GUTTER HITS THE FILTERRA "HEAD–ON". THIS CAN CAUSE SYSTEM DAMAGE (MEDIA EROSION OR SUSPENSION). REGARDLESS OF WHETHER BYPASS IS PROVIDED THIS IS A PROBLEM SCENARIO.

GUTTER FLOW SHOULD APPROACH THE FILTERRA PARALLEL TO THE THROAT SO THAT WATER FLOWS IN A LINEAR PATTERN IN FRONT OF THE THROAT. DURING EXTREME STORM EVENTS, EXCESS WATER SHOULD CONTINUE TO FLOW IN FRONT OF THE FILTERRA TO A BYPASS INLET OR OTHER RELIEF.

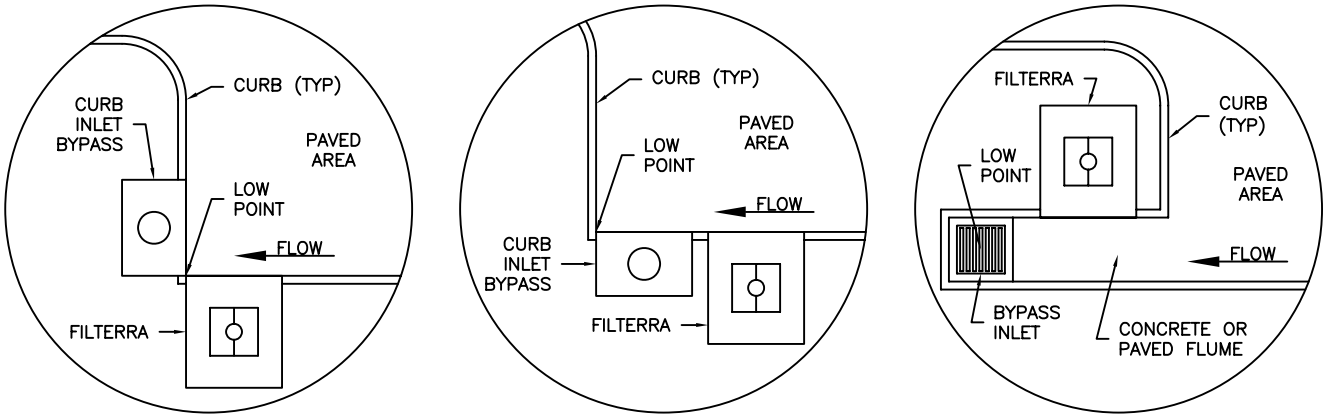


## POSSIBLE SOLUTIONS

MODIFICATIONS OF DRAWINGS ARE ONLY PERMITTED BY WRITTEN AUTHORIZATION FROM FILTERRA

AMERICAST®

Copyright © 2007 by Americast

| DATE: 12–22–04 | DWG: GU2 |
|---|---|

**FILTERRA® GUIDELINES**
**AVOID "HEAD-ON" GUTTTER FLOW**

filterra®

US PAT 6,277,274 AND 6,569,321

# PARKING LOT CORNERS

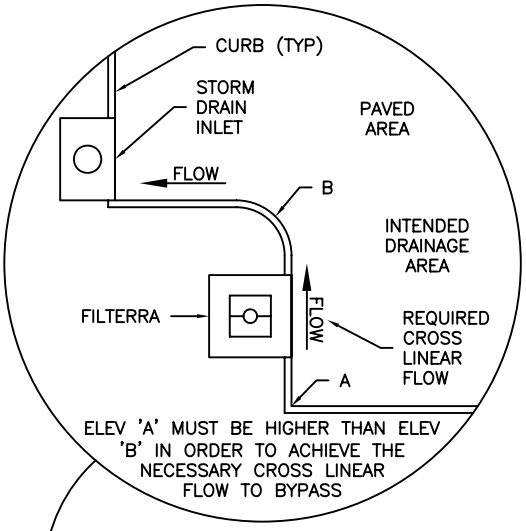


PLACEMENT

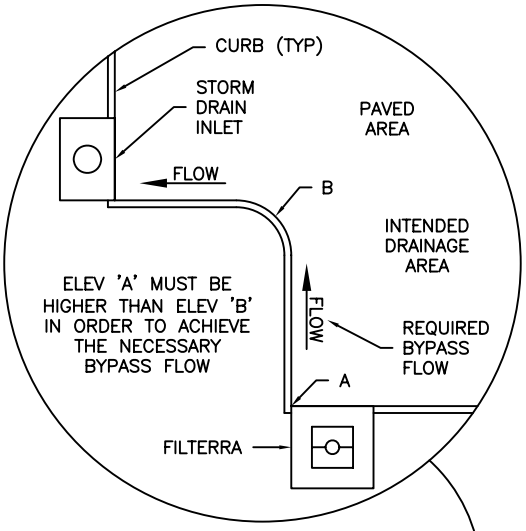


PLACEMENT

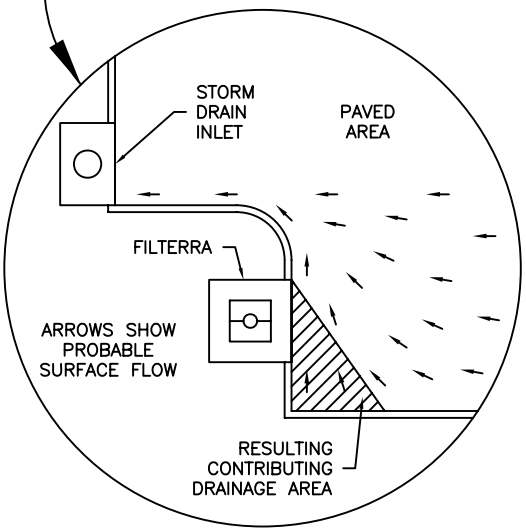


PROBLEM

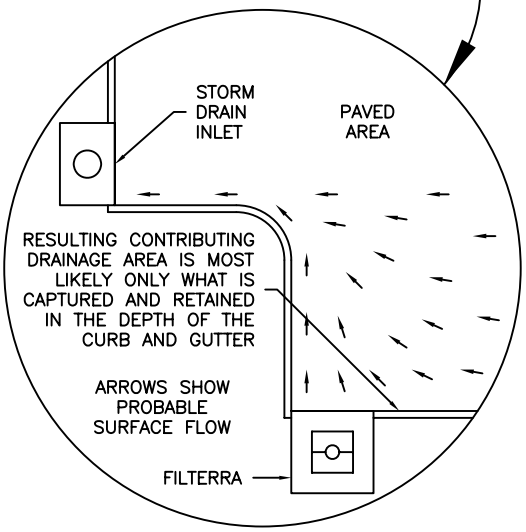


PROBLEM

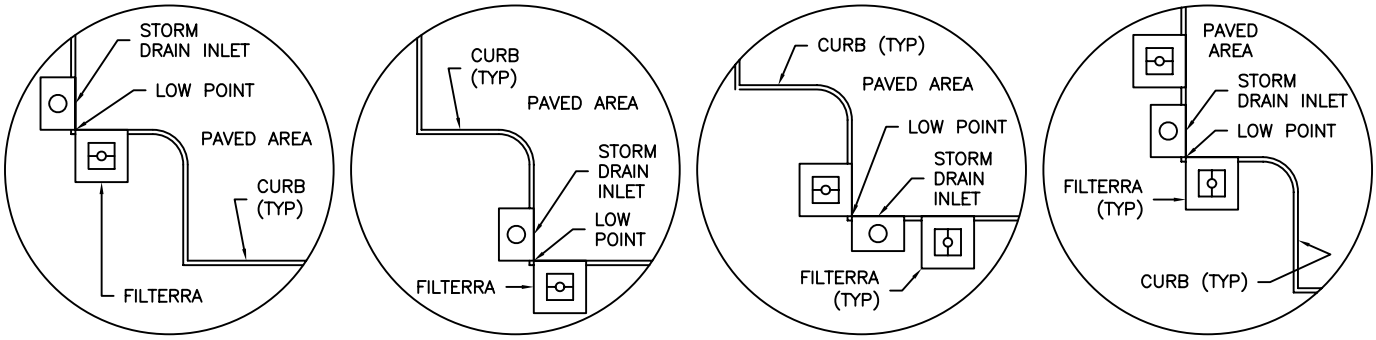


MODIFICATIONS OF DRAWINGS ARE ONLY PERMITTED BY WRITTEN AUTHORIZATION FROM FILTERRA

POSSIBLE PLACEMENT SOLUTIONS

AMERICAST®

Copyright © 2007 by Americast

| DATE: 12–14–04 | DWG: GU3 |
|---|---|

**FILTERRA® GUIDELINES**
**PARKING LOT CORNERS**

filterra®

US PAT 6,277,274 AND 6,569,321

# Section B

Filterra® Plans, Placement & Grading

Scenario Ideas to Ensure
Maximum Efficiency &
Minimum Space Used

Toll Free: (866) 349-3458
Fax: (951) 359-3439
design@filterra.com

**www.filterra.com**

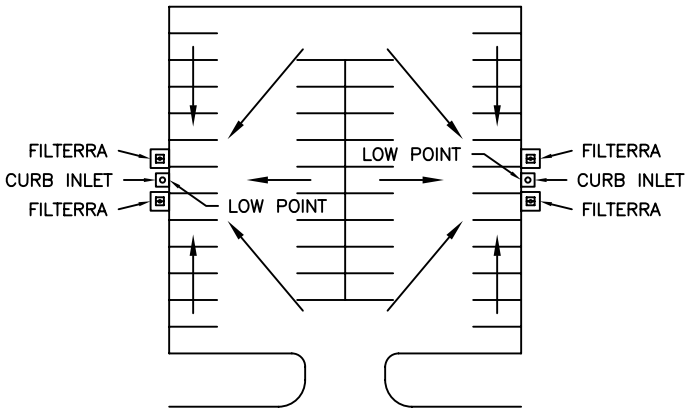


LOW POINTS AT 2 SIDES

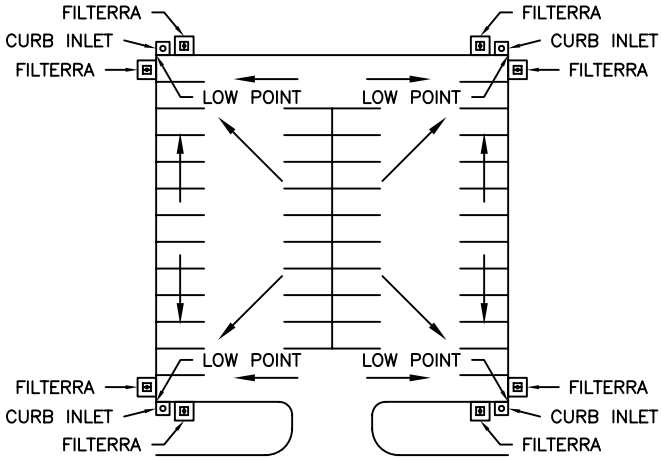


LOW POINTS AT 4 CORNERS

ARROWS INDICATE DIRECTION OF SURFACE DRAINAGE FLOW

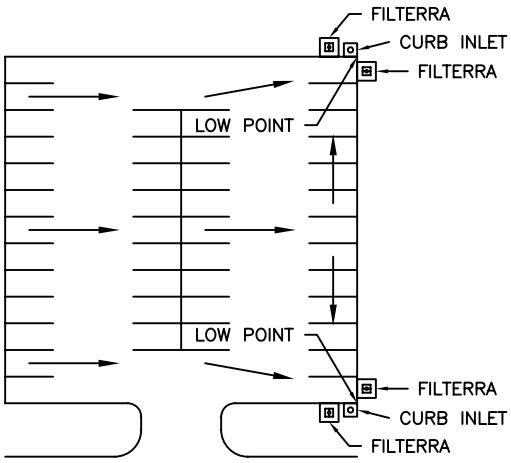


LOW POINTS AT 2 CORNERS

MODIFICATIONS OF DRAWINGS ARE ONLY PERMITTED BY WRITTEN AUTHORIZATION FROM FILTERRA

AMERICAST®

Copyright © 2007 by Americast

| DATE: 01-03-05 | DWG: PLG1 |
|---|---|

**FILTERRA® EXAMPLE SCENARIOS**

# TYPICAL PARKING LOT APPLICATIONS

filterra®

US PAT 6,277,274 AND 6,569,321

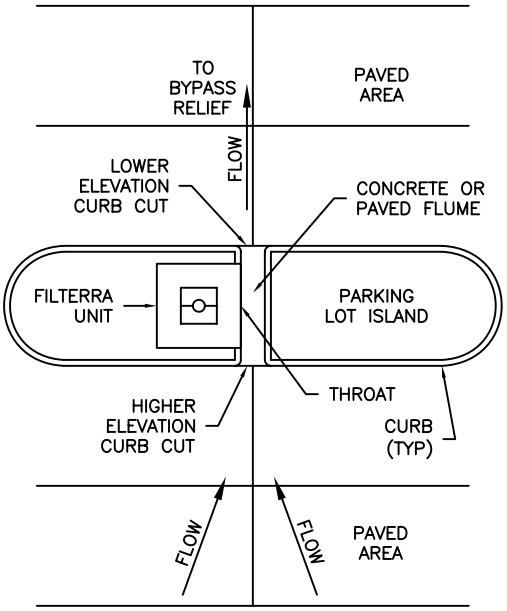


ON–GRADE ISLAND
IN OPEN PARKING LOT

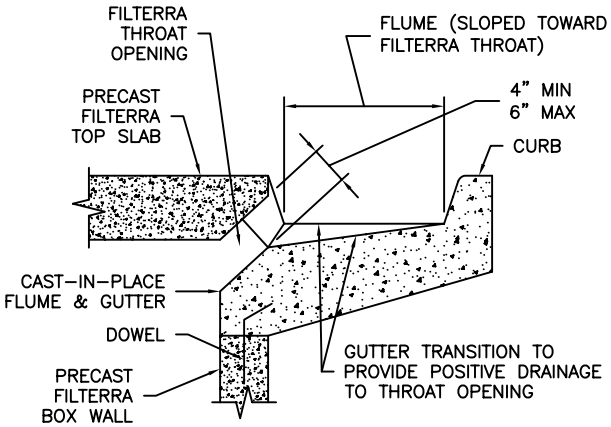


SECTION VIEW OF FILTERRA
THROAT AND FLUME

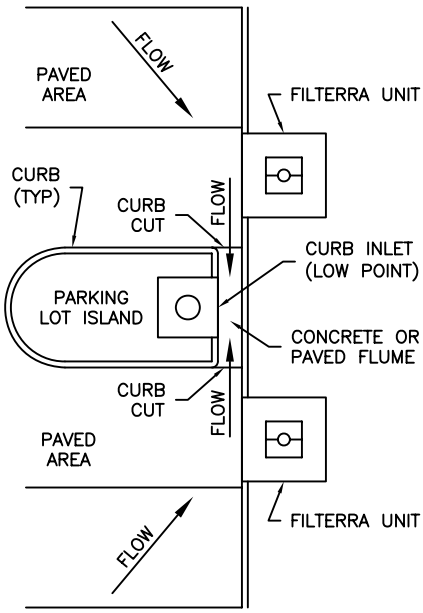


LOW POINT ISLAND
AT SIDE OF PARKING LOT

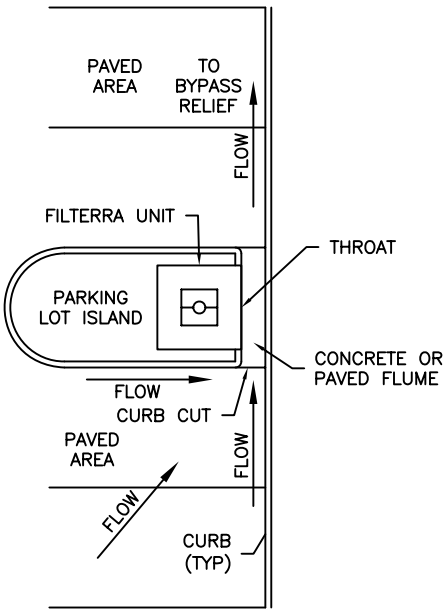


ON–GRADE ISLAND
AT SIDE OF PARKING LOT

MODIFICATIONS OF DRAWINGS ARE ONLY PERMITTED
BY WRITTEN AUTHORIZATION FROM FILTERRA

AMERICAST®

Copyright © 2007 by Americast

| DATE: 01–03–05 | DWG: PLG2 |
|---|---|

**FILTERRA® EXAMPLE SCENARIOS**

**PARKING LOT ISLAND APPLICATIONS**

filterra®

US PAT 6,277,274
AND 6,569,321

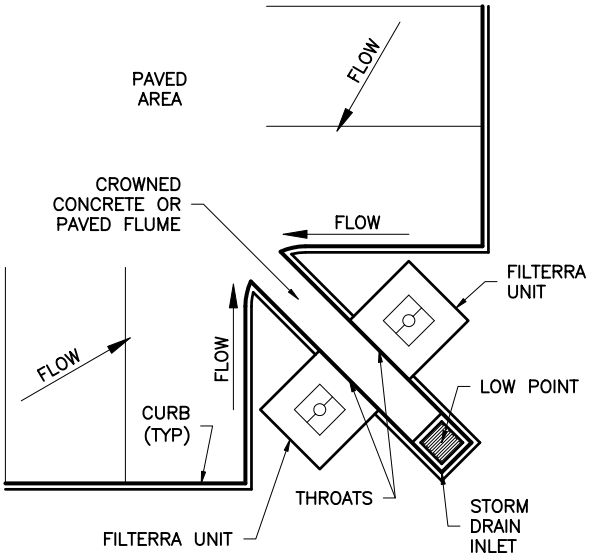


CROWNED FLUME CORNER

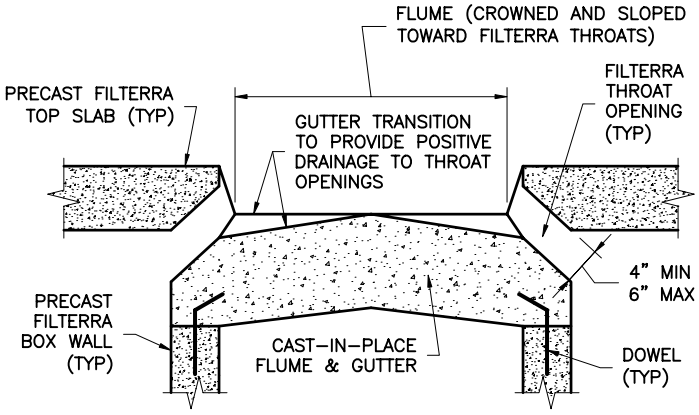


SECTION VIEW OF CROWNED FLUME

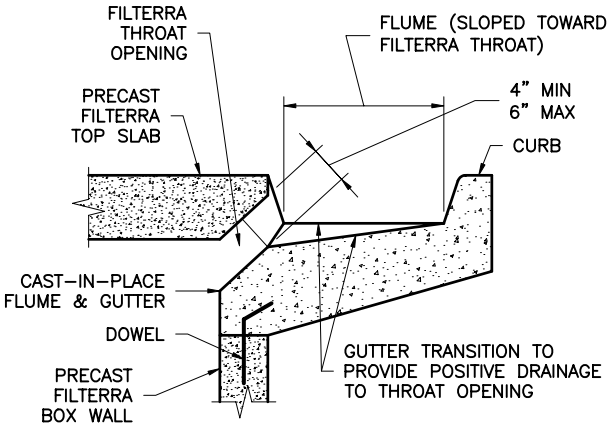


SECTION VIEW OF FILTERRA THROAT AND FLUME

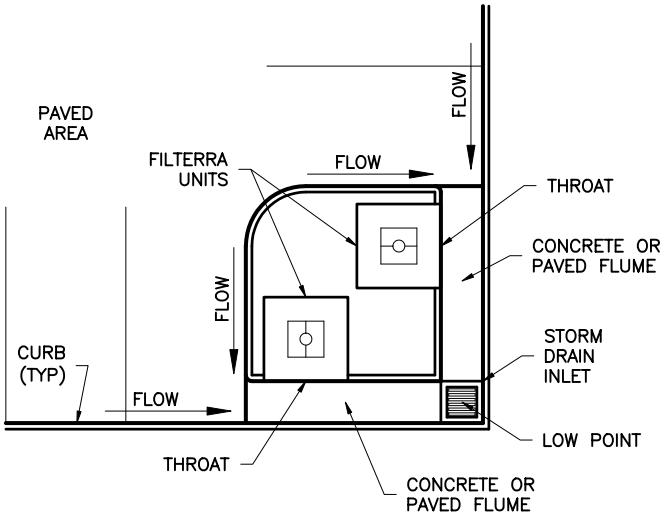


TWO FLUME CORNER

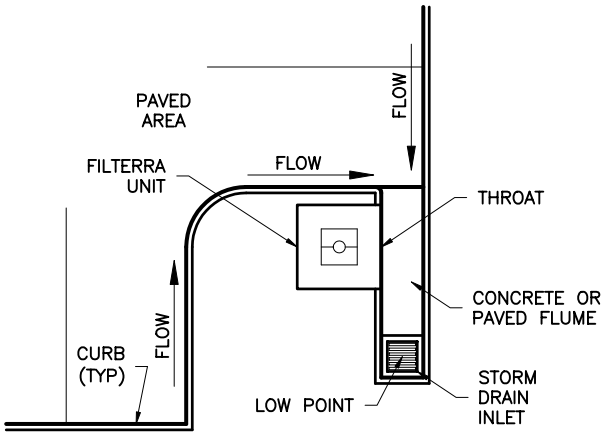


ONE FLUME CORNER

AMERICAST®

DATE: 01-03-05 | DWG: PLG3

**FILTERRA® EXAMPLE SCENARIOS**

**PARKING LOT CORNER APPLICATIONS**

filterra®

US PAT 6,277,274 AND 6,569,321

FILTERRA FLOW RATES

| FILTERRA SIZE (FEET) | EXPECTED FLOW RATE (CFS) | CONNECTING DRAINAGE PIPE |
|---|---|---|
| 4X6.5 OR 6.5X4 | 0.061 | 4" SDR-35 PVC |
| 4X8 OR 8X4 | 0.075 | 4" SDR-35 PVC |
| 6X6 | 0.084 | 4" SDR-35 PVC |
| 6X8 OR 8X6 | 0.112 | 4" SDR-35 PVC |
| 6X10 OR 10X6 | 0.140 | 6" SDR-35 PVC |
| 6X12 OR 12X6 | 0.168 | 6" SDR-35 PVC |

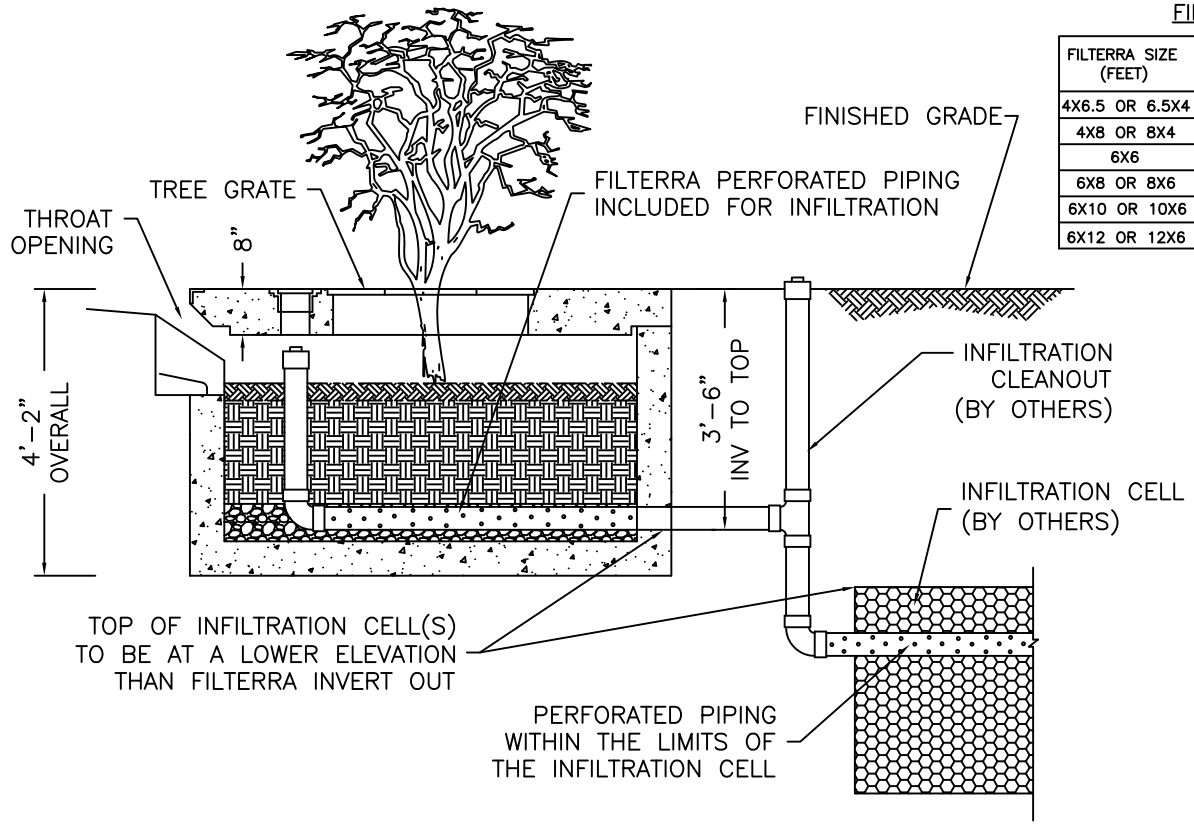


SECTION VIEW

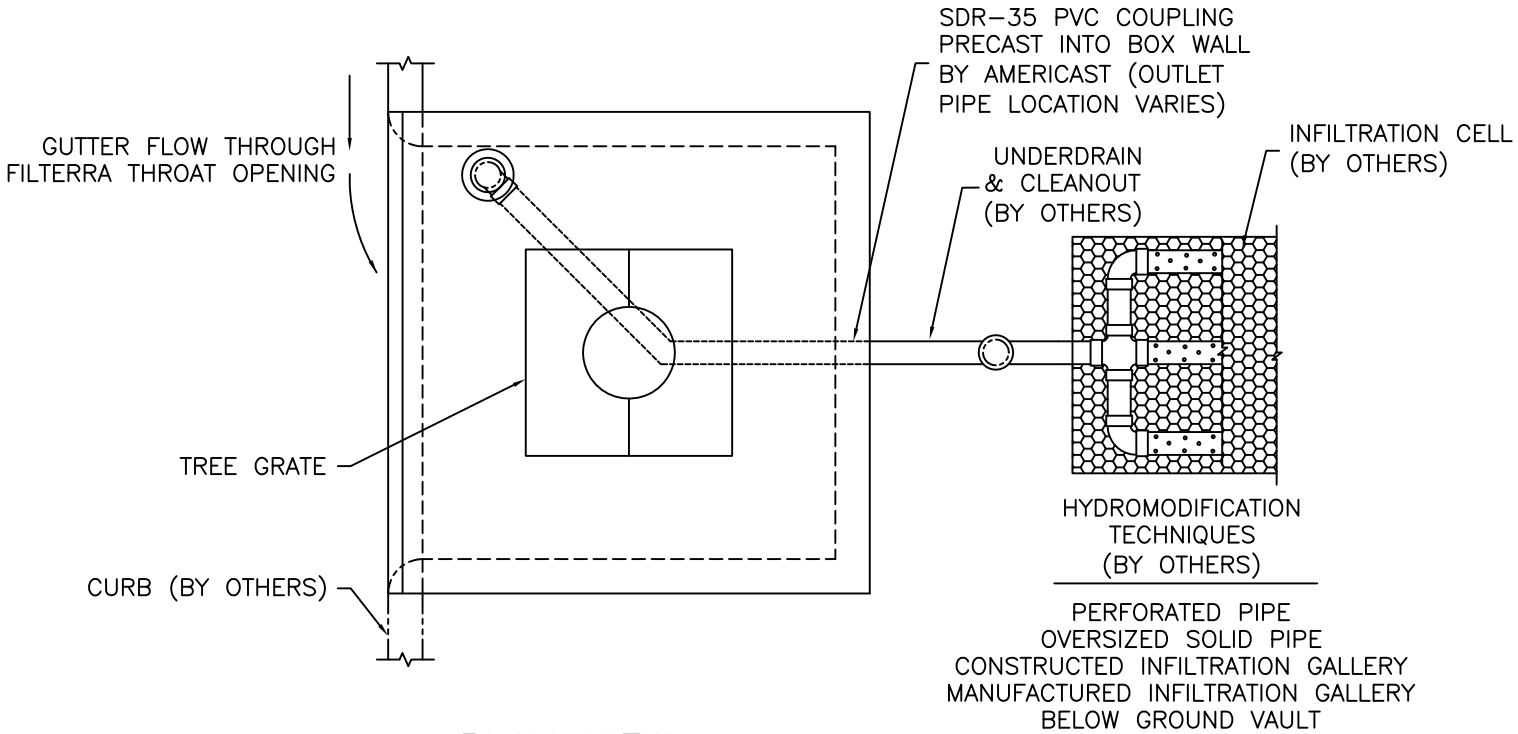


PLAN VIEW

INFILTRATION CELL BENEATH FILTERRA

MODIFICATIONS OF DRAWINGS ARE ONLY PERMITTED BY WRITTEN AUTHORIZATION FROM FILTERRA

DRAWING AVAILABLE IN TIF FILE FORMAT.

AMERICAST®

Copyright © 2007 by Americast

DATE: 05-07-08 | DWG: FTHYD-1

**TYPICAL FILTERRA® HYDROMODIFICATION CONFIGURATION**

filterra®

US PAT 6,277,274 AND 6,569,321

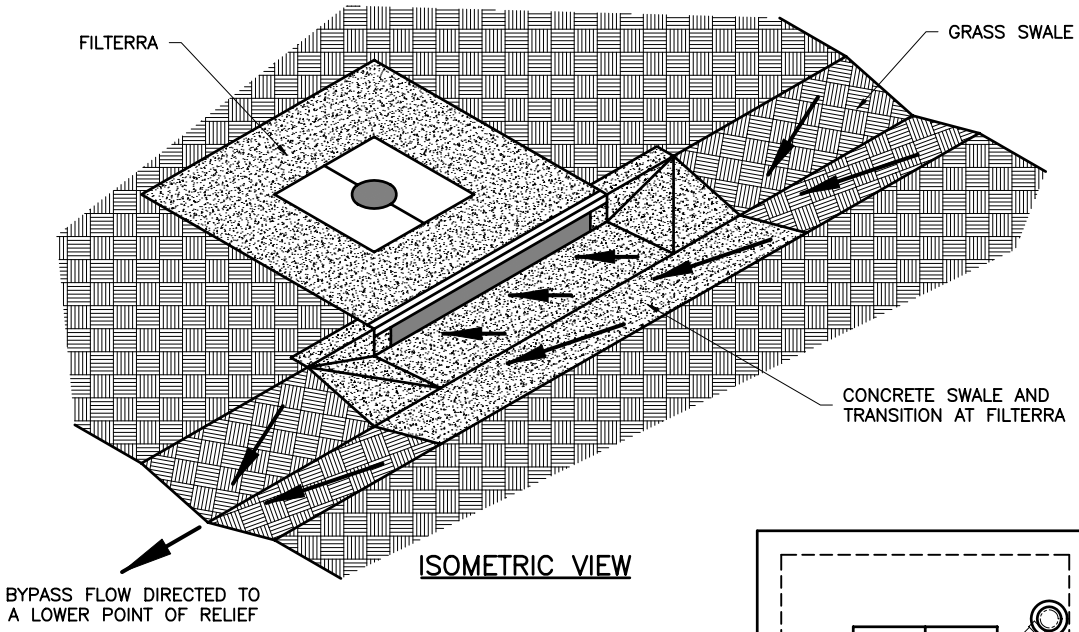


ISOMETRIC VIEW

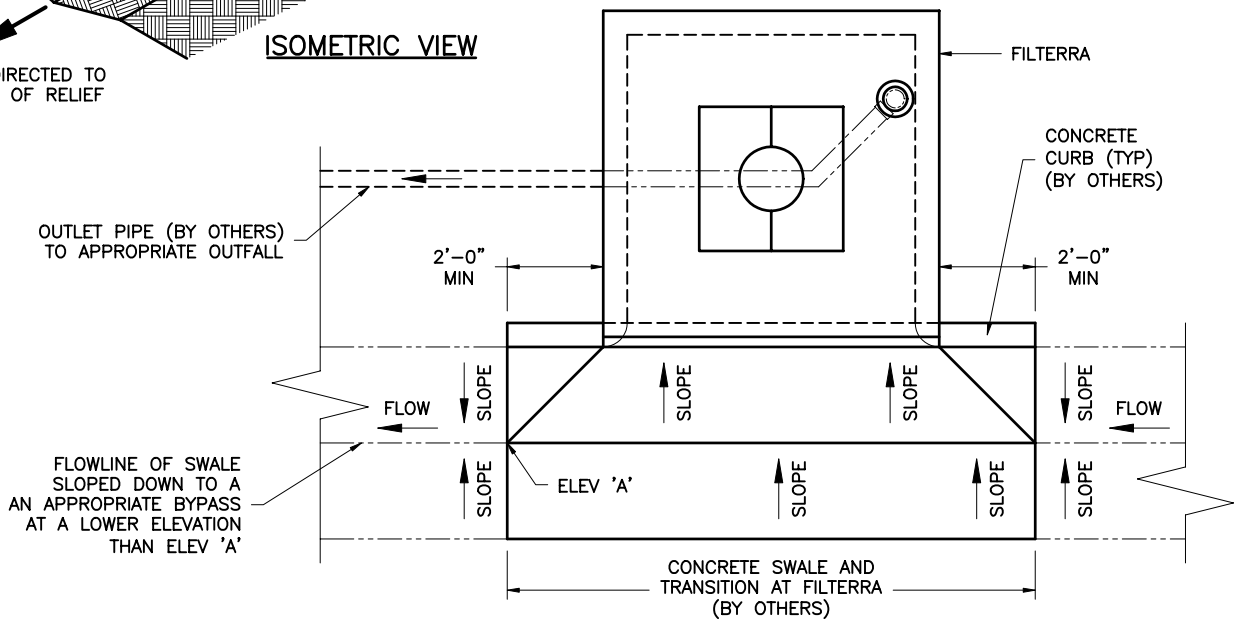


PLAN VIEW

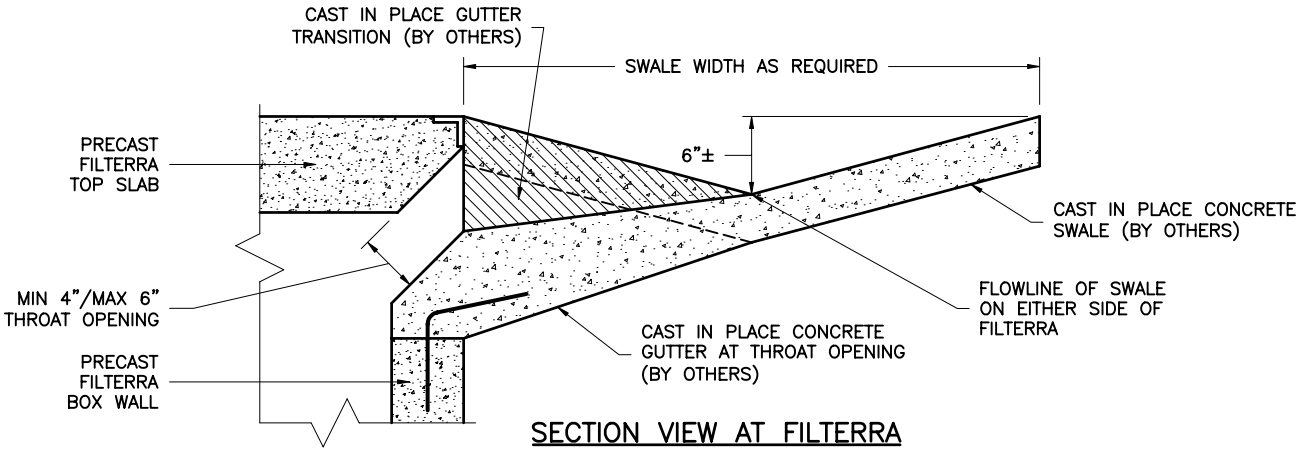


SECTION VIEW AT FILTERRA

DRAWING AVAILABLE IN TIF FILE FORMAT.

AMERICAST®

Copyright © 2005 by Americast

| DATE: 03–10–05 | DWG: FTSWL–1 |
|---|---|

**PRECAST FILTERRA® UNIT**
**TYPICAL SWALE**
**CONFIGURATION**

filterra®

US PAT 6,277,274
AND 6,569,321

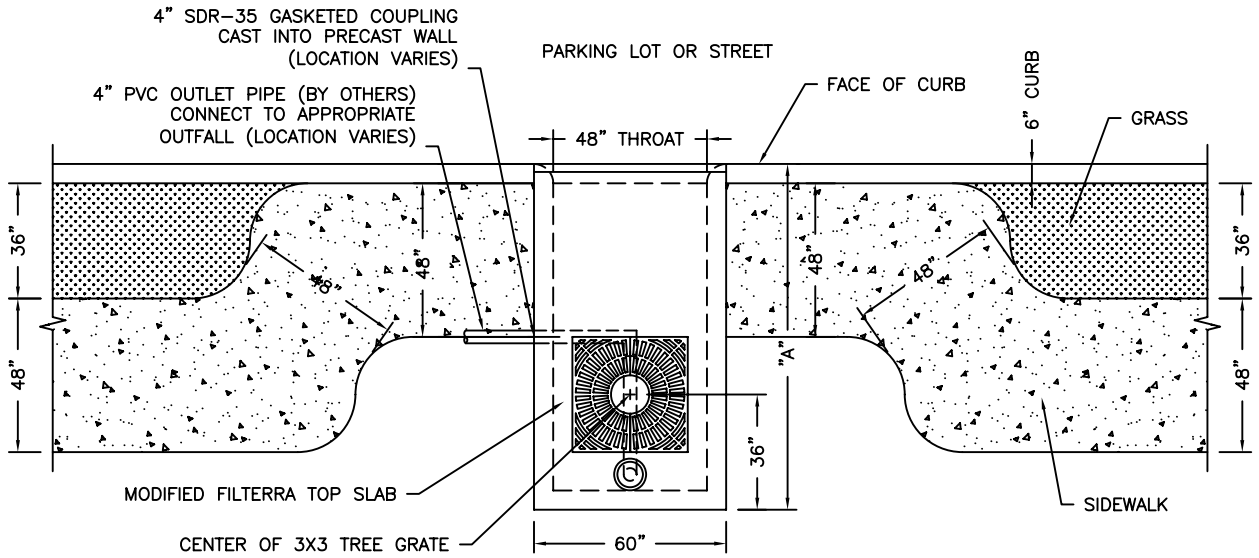


| BOX SIZE | DIM. "A" | TREE GRATE |
|---|---|---|
| 4X8 & 6X8 | 9'-0" | 3'x3' |
| 6X10 | 11'-0" | 3'x3' |

MODIFIED NARROW LENGTH FILTERRA UNIT

ONLY FOR 4X8 (SHOWN) 6X8 AND 6X10 BOXES

**PLEASE NOTE MODIFICATION ON PROJECT INFORMATION FORM**

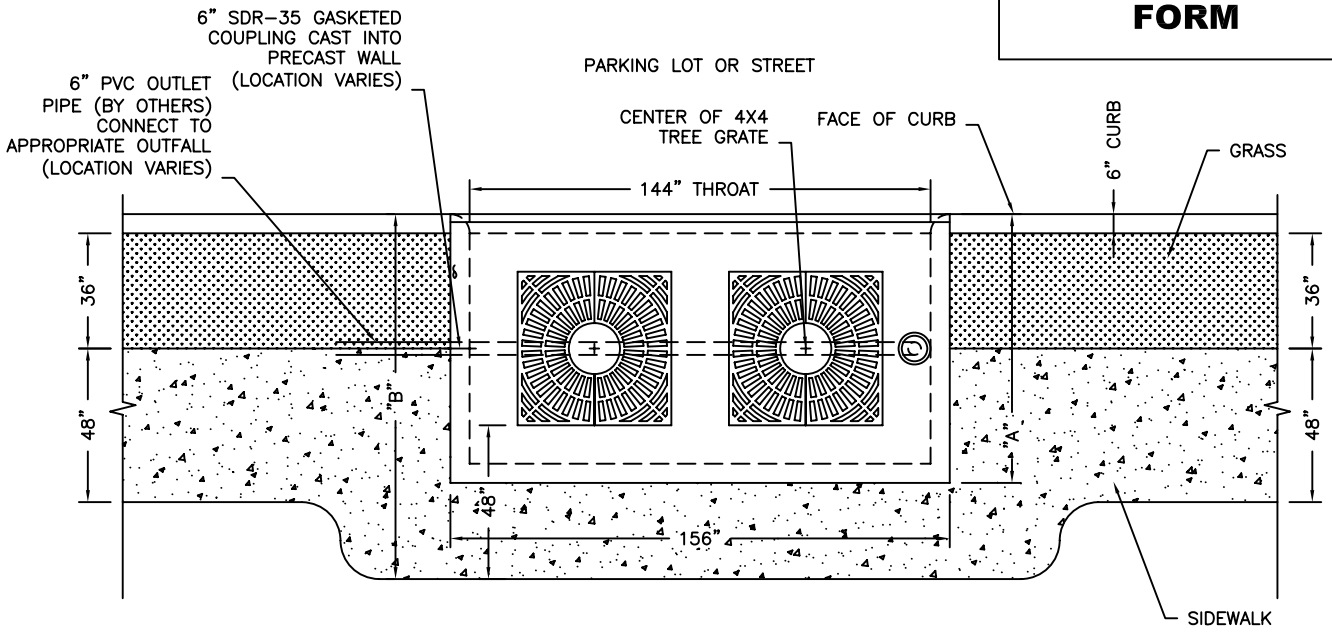


| BOX SIZE | DIM "A" | DIM "B" | TREE GRATE |
|---|---|---|---|
| 6.5X4 & 8X4 | 5'-0" | 8'-0" | 3'x3' |
| 6X6 & 8X6 | 7'-0" | 9'-0" | 3'x3' |
| 10X6 & 12X6 | 7'-0" | 9'-6" | 4'x4'* |

*3'x3' TREE GRATE IS OPTIONAL

STANDARD NARROW WIDTH FILTERRA UNIT

SUITABLE FOR ALL STANDARD BOXES

MODIFICATIONS OF DRAWINGS ARE ONLY PERMITTED BY WRITTEN AUTHORIZATION FROM FILTERRA

AMERICAST®

Copyright © 2007 by Americast

TOLL FREE (866) 349-3458

DATE: 07-07-06 | DWG: FTSC-2

**TYPICAL FILTERRA® SIDEWALK CONFIGURATIONS**

filterra®

US PAT 6,277,274 AND 6,569,321

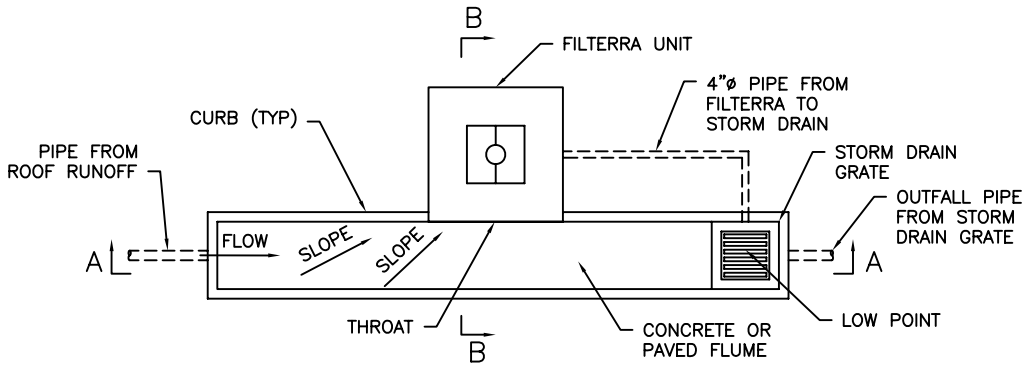


FLUME PLAN

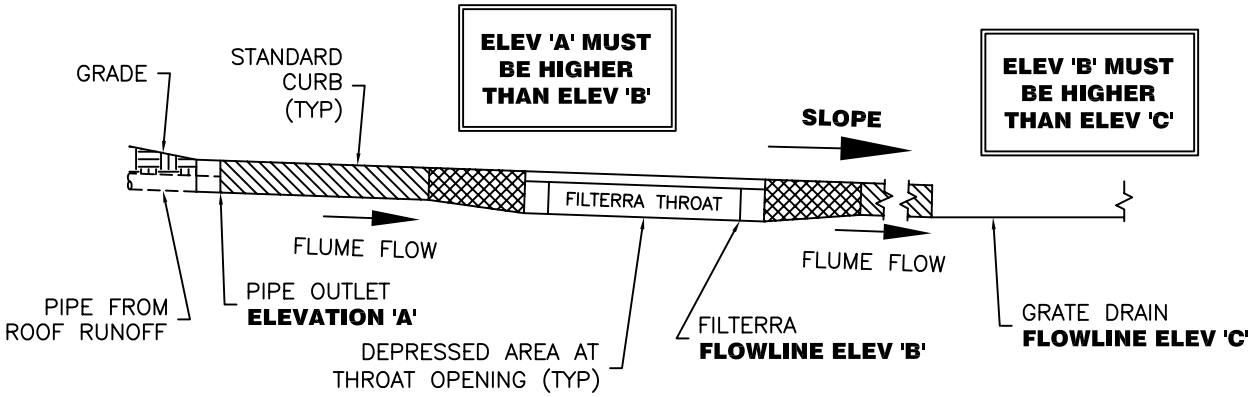


FLUME CROSS SECTION A–A

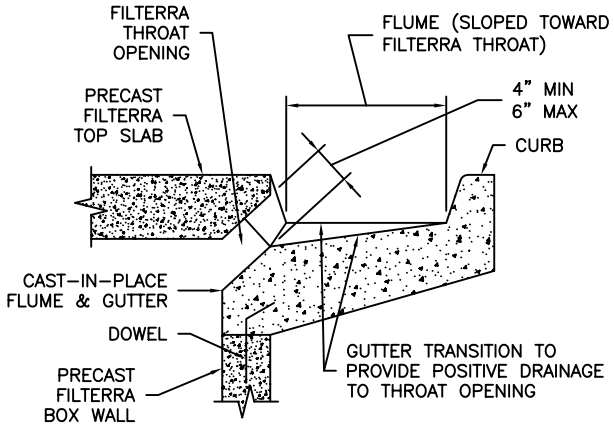


FLUME SECTION B–B

MODIFICATIONS OF DRAWINGS ARE ONLY PERMITTED BY WRITTEN AUTHORIZATION FROM FILTERRA

AMERICAST®

Copyright © 2007 by Americast

| DATE: 03–17–05 | DWG: FTRDF–1 |
|---|---|

**FILTERRA® EXAMPLE SCENARIOS**

**ROOF DRAIN FLUME APPLICATION**

filterra®

US PAT 6,277,274 AND 6,569,321

# Section C

## Standard Filterra® Detail Drawings & Filterra® Plan Notes

For TIF versions of these detail drawings, please contact Americast.
Toll Free: (866) 349-3458
E-mail: design@filterra.com

Reproduction of these detail drawings is permitted for use only in site plans or contract documents for eventual supply by Americast or its authorized dealer. Other uses are prohibited and may infringe copyright or patent protection laws.

Filterra and Americast reserve the right to alter specifications without notice. Please make certain the Filterra Project Information Form is completed to ensure the verification of the latest specifications for your project.

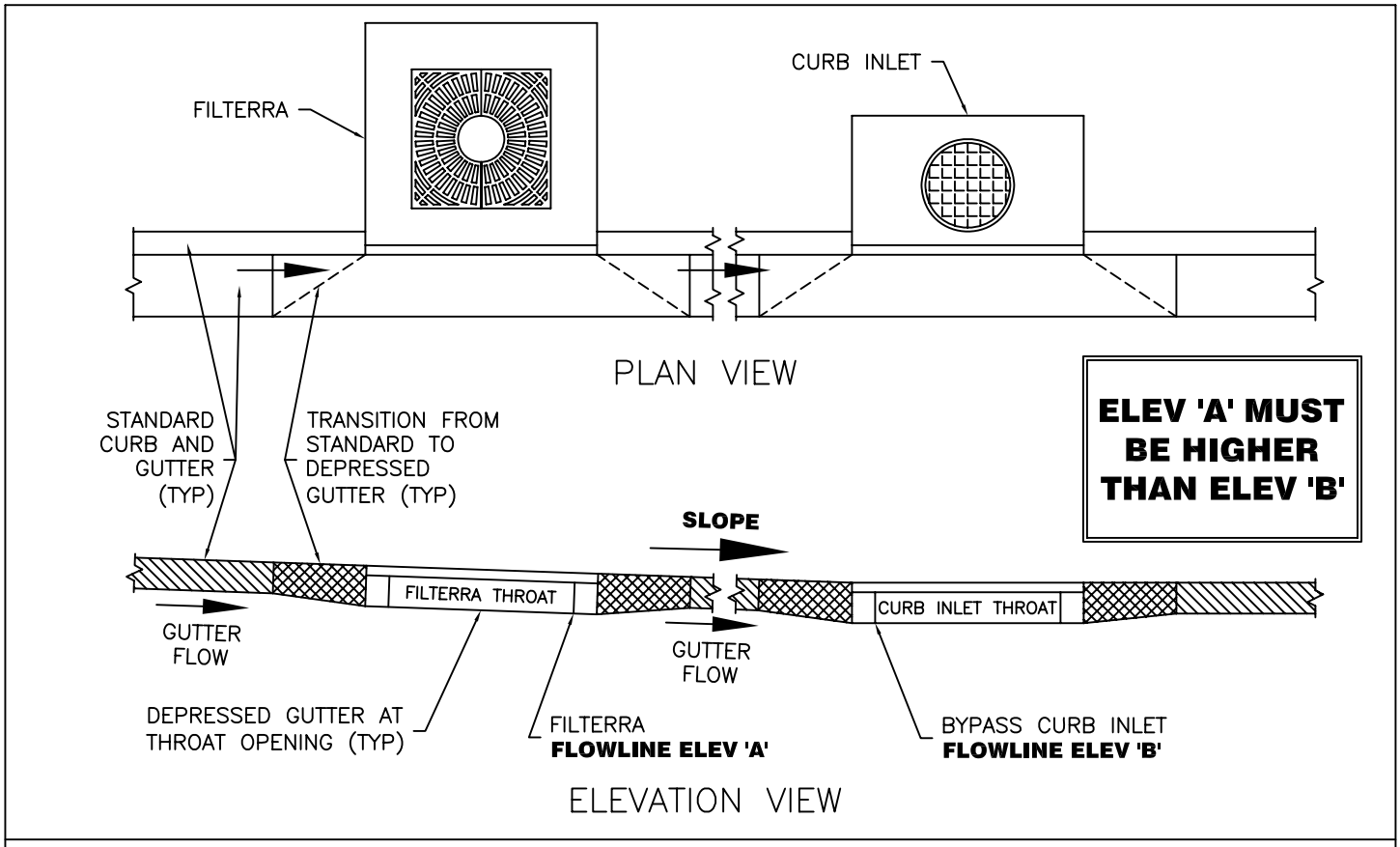


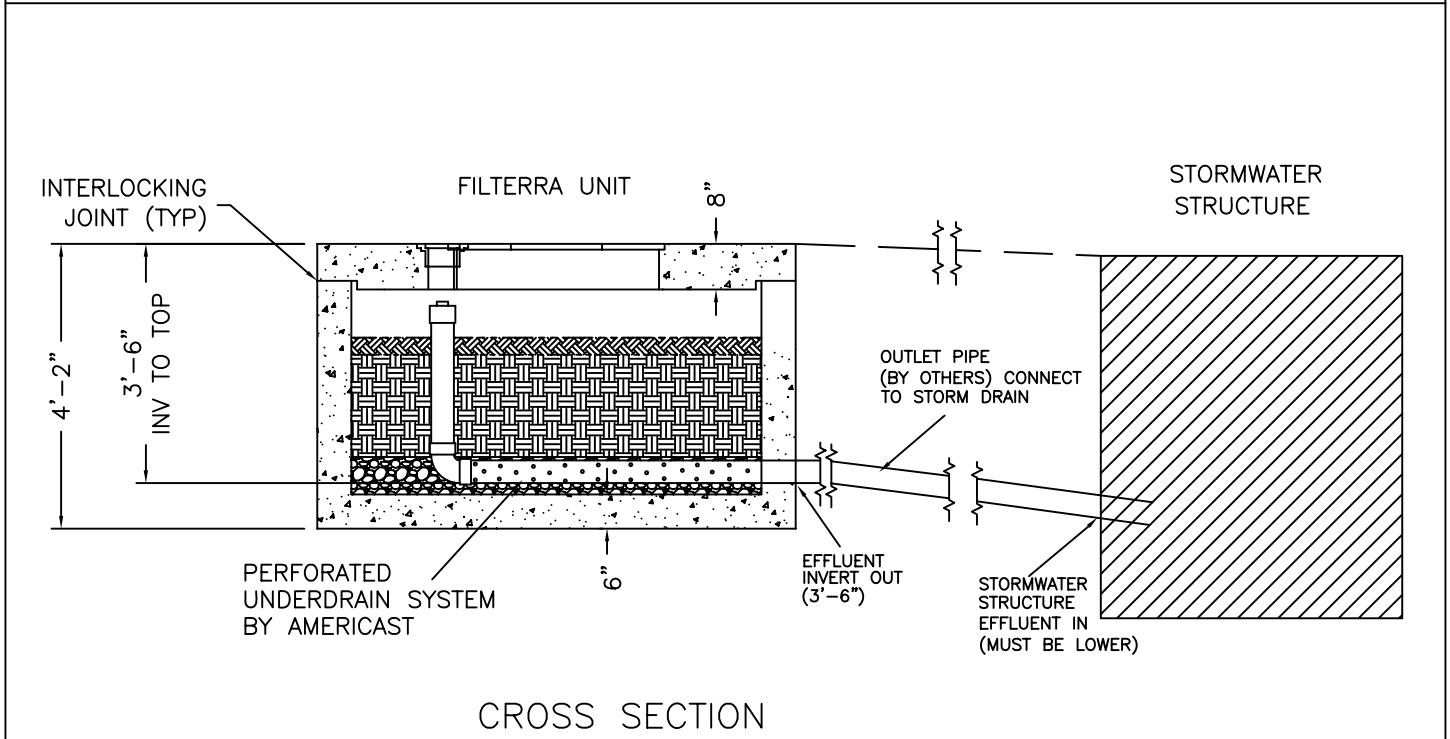


MODIFICATIONS OF DRAWINGS ARE ONLY PERMITTED BY WRITTEN AUTHORIZATION FROM FILTERRA

AMERICAST®

Copyright © 2007 by Americast

DATE: 07-07-06 | DWG: FLP-2

**FILTERRA® TYPICAL FLOWLINE AND OULET PIPE RELATIONSHIP**

filterra®

US PAT 6,277,274 AND 6,569,321

## CROWNED FLUME

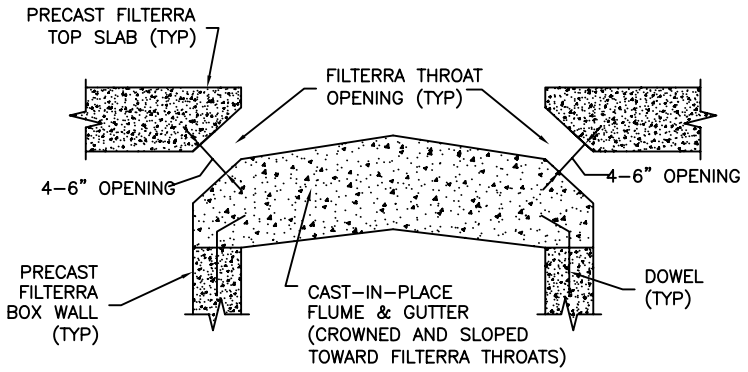


## FLUME – SLOPED TOWARDS FILTERRA THROAT

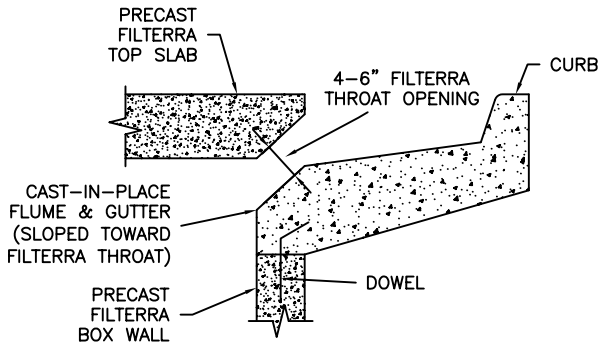


## SECTIONS VIEWS OF FILTERRA IN TYPICAL FLUME APPLICATIONS

SEE BELOW FOR DETAILS NOT SHOWN

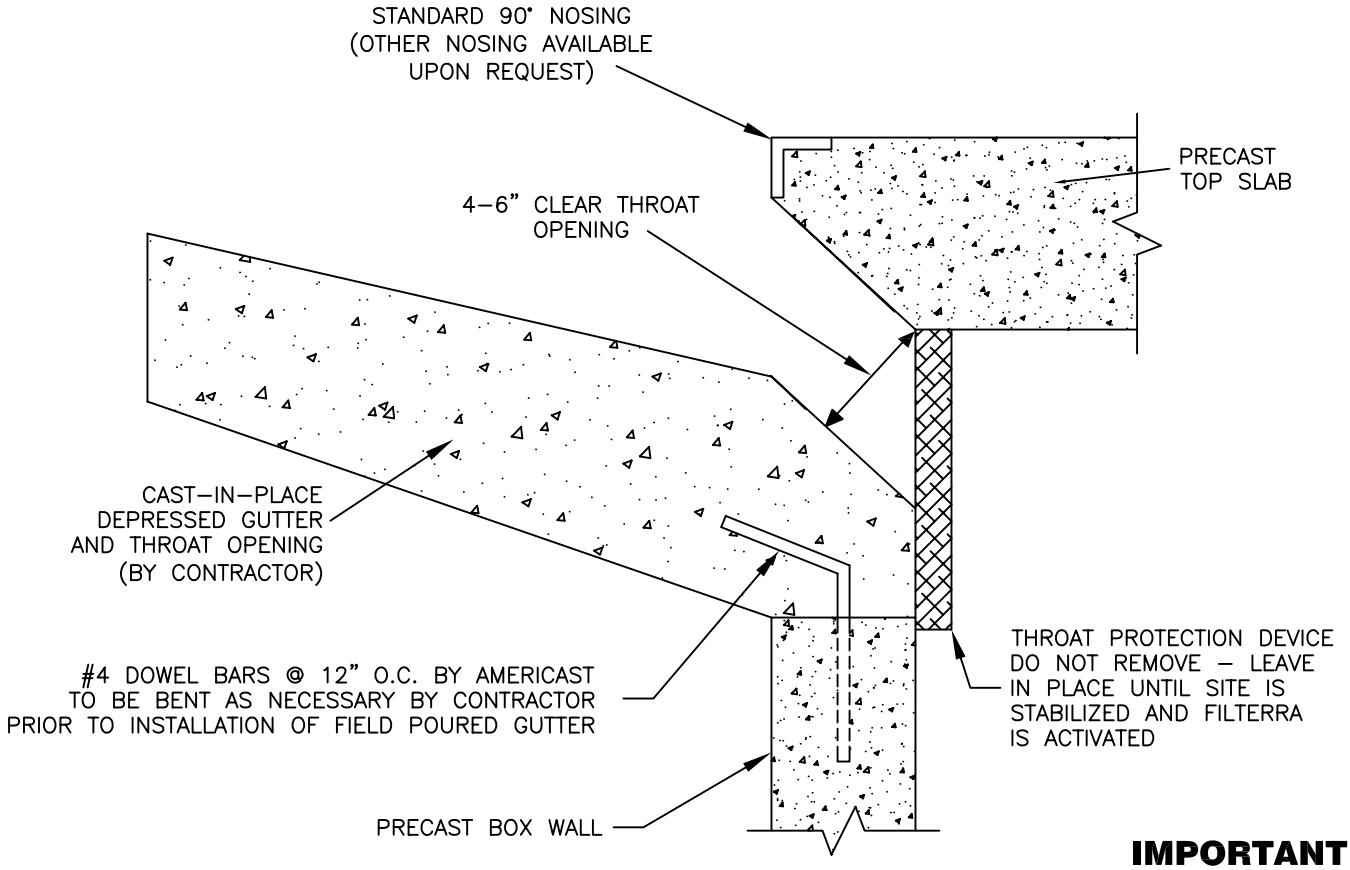


## SECTION VIEW
## STANDARD FILTERRA THROAT OPENING

**IMPORTANT**

FILTERRA FLOWLINE MUST BE AT A HIGHER ELEVATION THAN BYPASS FLOWLINE (DROP INLET OR OTHER)

MODIFICATIONS OF DRAWINGS ARE ONLY PERMITTED BY WRITTEN AUTHORIZATION FROM FILTERRA

DRAWING AVAILABLE IN TIFF FILE FORMAT.

AMERICAST®

Copyright © 2007 by Americast

DATE: 02–27–06 | DWG: CGT–4

**FILTERRA® THROAT OPENING AND GUTTER OR FLUME DETAIL**

filterra®

US PAT 6,277,274 AND 6,569,321

# Filterra® Standard Plan Notes

## Construction & Installation

A. Each unit shall be constructed at the locations and elevations according to the sizes shown on the approved drawings. Any modifications to the elevation or location shall be at the direction of and approved by the Engineer.

B. If the Filterra® is stored before installation, the top slab must be placed on the box using the 2x4 wood provided, to prevent any contamination from the site. All internal fittings supplied (if any), must be left in place as per the delivery.

C. The unit shall be placed on a compacted sub-grade with a minimum 6-inch gravel base matching the final grade of the curb line in the area of the unit. The unit is to be placed such that the unit and top slab match the grade of the curb in the area of the unit. Compact undisturbed sub-grade materials to 95% of maximum density at +1- 2% of optimum moisture. Unsuitable material below sub-grade shall be replaced to the site engineer's approval.

D. Outlet connections shall be aligned and sealed to meet the approved drawings with modifications necessary to meet site conditions and local regulations.

E. Once the unit is set, the internal wooden forms and protective mesh cover must be left intact. Remove only the temporary wooden shipping blocks between the box and top slab. The top lid should be sealed onto the box section before backfilling, using a non-shrink grout, butyl rubber or similar waterproof seal. The boards on top of the lid and boards sealed in the unit's throat must **NOT** be removed. The Supplier (Americast or its authorized dealer) will remove these sections at the time of activation. Backfilling should be performed in a careful manner, bringing the appropriate fill material up in 6" lifts on all sides. Precast sections shall be set in a manner that will result in a watertight joint. In all instances, installation of Filterra® unit shall conform to ASTM specification C891 "Standard Practice for Installation of Underground Precast Utility Structures", unless directed otherwise in contract documents.

F. Curb and gutter construction (where present) shall ensure that the flow-line of the Filterra® units is at a greater elevation than the flow-line of the bypass structure or relief (drop inlet, curb cut or similar). Failure to comply with this guideline may cause failure and/or damage to the Filterra® environmental device.

G. Each Filterra® unit must receive adequate irrigation to ensure survival of the living system during periods of drier weather. This may be achieved through a piped system, gutter flow or through the tree grate.

## Activation

A. Activation of the Filterra® unit is performed ONLY by the Supplier. Purchaser is responsible for Filterra® inlet protection and subsequent clean out cost. This process cannot commence until the project site is fully stabilized and cleaned (full landscaping, grass cover, final paving and street sweeping completed), negating the chance of construction materials contaminating the Filterra® system. Care shall be taken during construction not to damage the protective throat and top plates.

B. Activation includes installation of plant(s) and mulch layers as necessary.

## Included Maintenance

A. Each correctly installed Filterra® unit is to be maintained by the Supplier, or a Supplier approved contractor for a minimum period of 1 year. The cost of this service is to be included in the price of each Filterra® unit. Extended maintenance contracts are available at extra cost upon request.

B. Annual included maintenance consists of a maximum of (2) scheduled visits. The visits are scheduled seasonally; the spring visit aims to clean up after winter loads that may include salts and sands. The fall visit helps the system by removing excessive leaf litter.

C. Each Included Maintenance visit consists of the following tasks.

1. Filterra® unit inspection
2. Foreign debris, silt, mulch & trash removal
3. Filter media evaluation and recharge as necessary
4. Plant health evaluation and pruning or replacement as necessary
5. Replacement of mulch
6. Disposal of all maintenance refuse items
7. Maintenance records updated and stored (reports available upon request)

D. The beginning and ending date of Supplier's obligation to maintain the installed system shall be determined by the Supplier at the time the system is activated. Owners must promptly notify the Supplier of any damage to the plant(s), which constitute(s) an integral part of the bioretention technology.

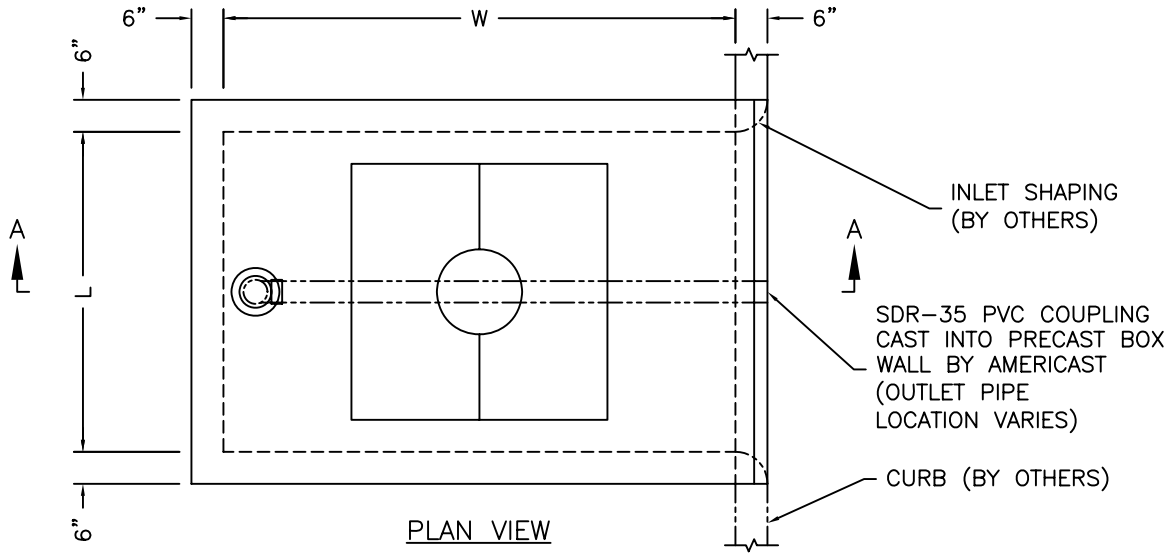


PLAN VIEW

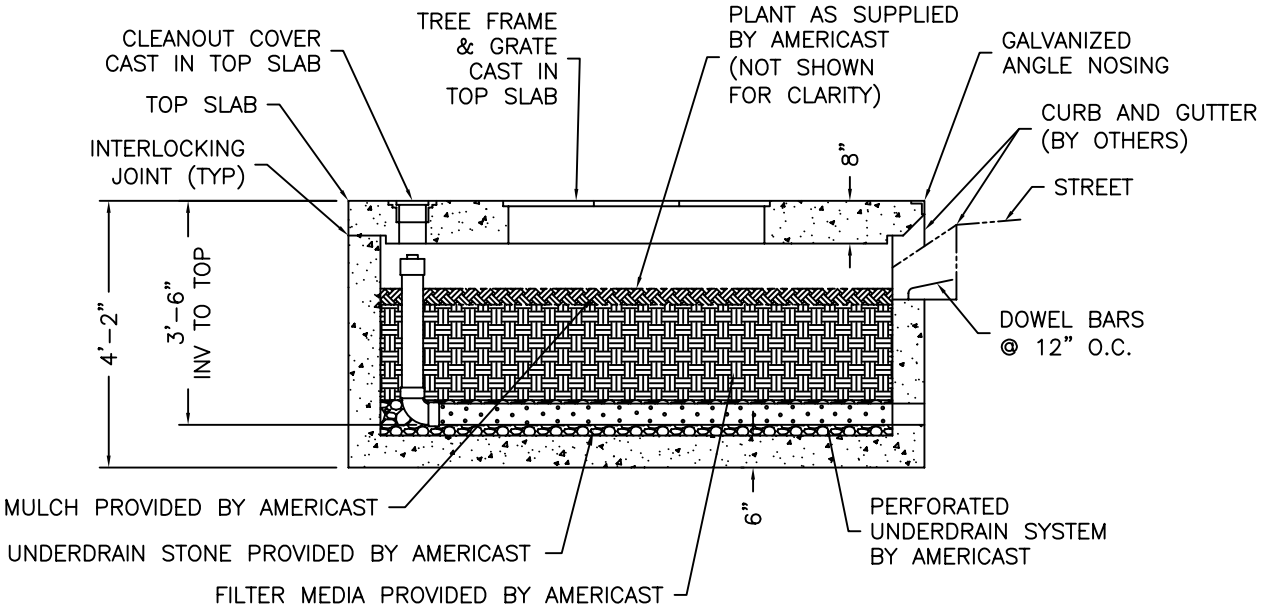


SECTION A–A

| DESIGNATION | L | W | TREE GRATE QTY & SIZE | OUTLET PIPE |
|---|---|---|---|---|
| 4 x 6.5 | 4'–0" | 6'–6" | (1) 3x3 | 4" SDR–35 PVC |
| 4 x 8 | 4'–0" | 8'–0" | (1) 3x3 | 4" SDR–35 PVC |
| 6 x 8 | 6'–0" | 8'–0" | (1) 4x4 | 4" SDR–35 PVC |
| 6 x 10 | 6'–0" | 10'–0" | (1) 4x4 | 6" SDR–35 PVC |
| 6 x 12 | 6'–0" | 12'–0" | (2) 4x4 | 6" SDR–35 PVC |

MODIFICATIONS OF DRAWINGS ARE ONLY PERMITTED BY WRITTEN AUTHORIZATION FROM FILTERRA

DRAWING AVAILABLE IN TIF FILE FORMAT.

AMERICAST®

Copyright © 2007 by Americast

DATE: 07–07–06 DWG: FTNL–2

**PRECAST FILTERRA® UNIT**
**NARROW LENGTH CONFIGURATION**

filterra®

US PAT 6,277,274 AND 6,569,321

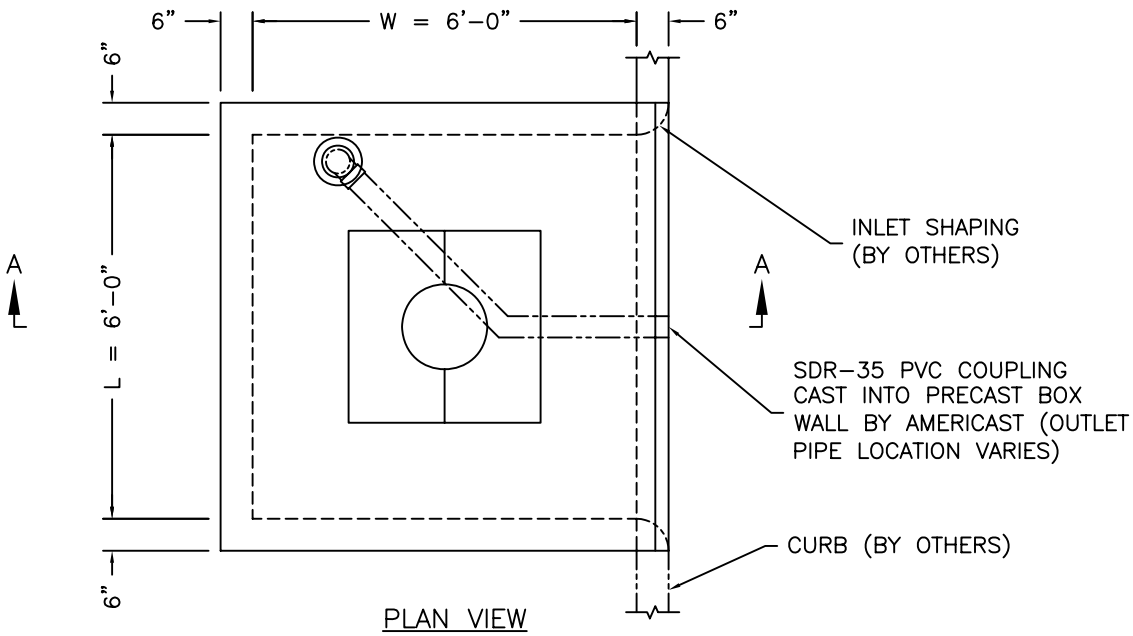


PLAN VIEW

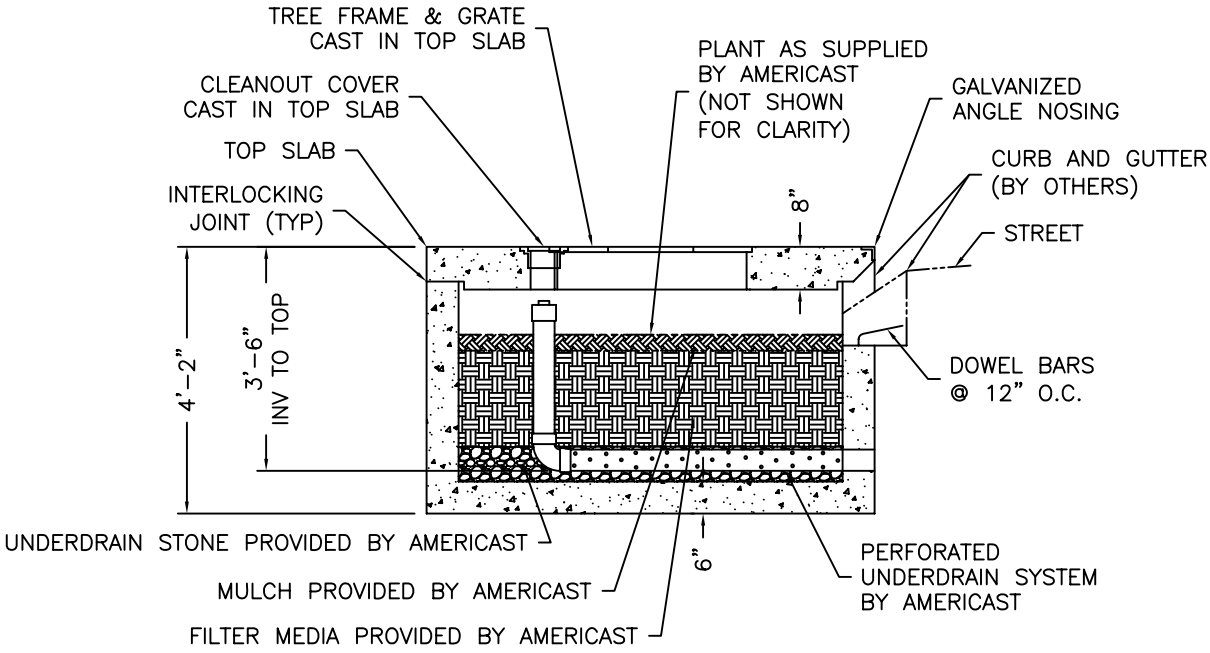


SECTION A–A

| DESIGNATION | L | W | TREE GRATE QTY & SIZE | OUTLET PIPE |
|---|---|---|---|---|
| 6 x 6 | 6'–0" | 6'–0" | (1) 3x3 | 4" SDR–35 PVC |

DRAWING AVAILABLE IN TIF FILE FORMAT.

AMERICAST®

Copyright © 2004 by Americast

DATE: 07–07–06 DWG: FTST–2

**PRECAST FILTERRA® UNIT STANDARD CONFIGURATION**

filterra®

US PAT 6,277,274 AND 6,569,321

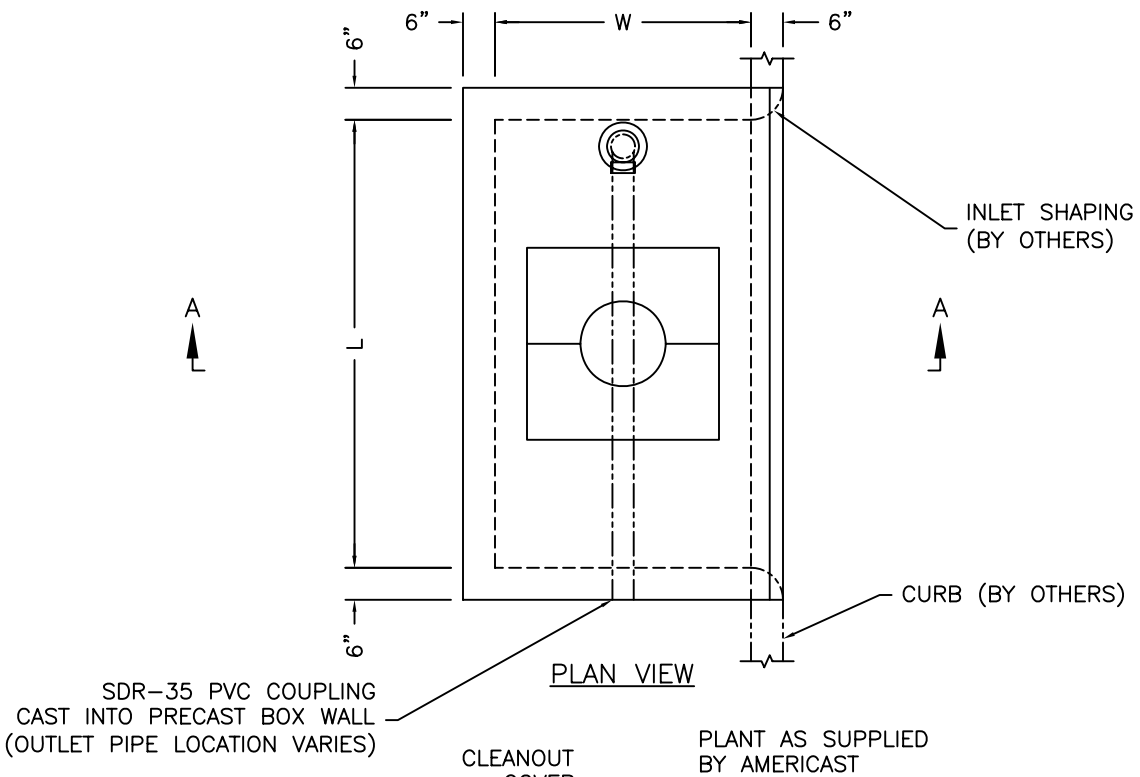


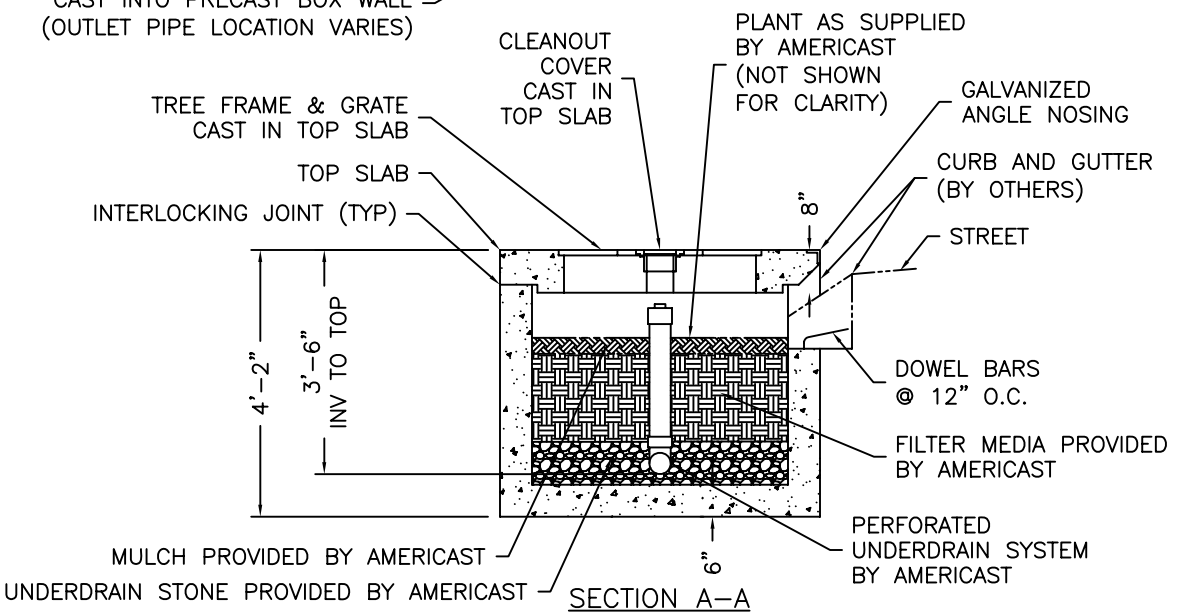


| DESIGNATION | L | W | TREE GRATE QTY & SIZE | OUTLET PIPE |
|---|---|---|---|---|
| 6.5 x 4 | 6'-6" | 4'-0" | (1) 3x3 | 4" SDR-35 PVC |
| 8 x 4 | 8'-0" | 4'-0" | (1) 3x3 | 4" SDR-35 PVC |
| 8 x 6 | 8'-0" | 6'-0" | (1) 4x4 | 4" SDR-35 PVC |
| 10 x 6 | 10'-0" | 6'-0" | (1) 4x4 | 6" SDR-35 PVC |
| 12 x 6 | 12'-0" | 6'-0" | (2) 4x4 | 6" SDR-35 PVC |

MODIFICATIONS OF DRAWINGS ARE ONLY PERMITTED BY WRITTEN AUTHORIZATION FROM FILTERRA

DRAWING AVAILABLE IN TIF FILE FORMAT.

AMERICAST®

Copyright © 2007 by Americast

DATE: 07-07-06 DWG: FTNW-2

**PRECAST FILTERRA® UNIT**
**NARROW WIDTH CONFIGURATION**

filterra®

US PAT 6,277,274 AND 6,569,321

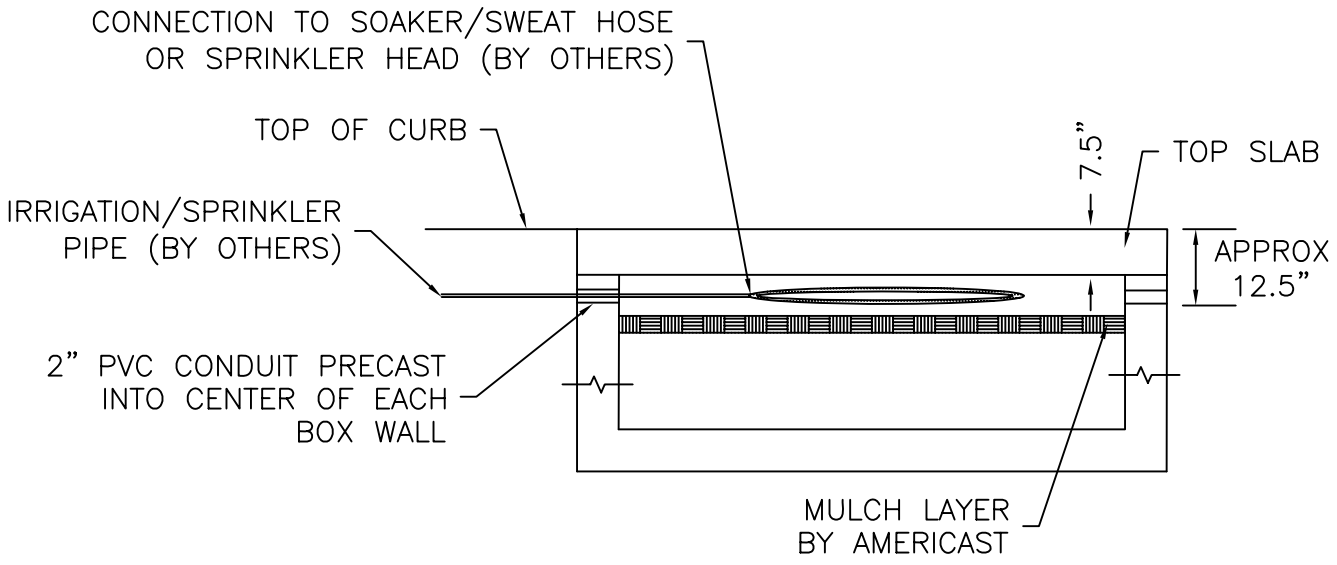


ELEVATION VIEW

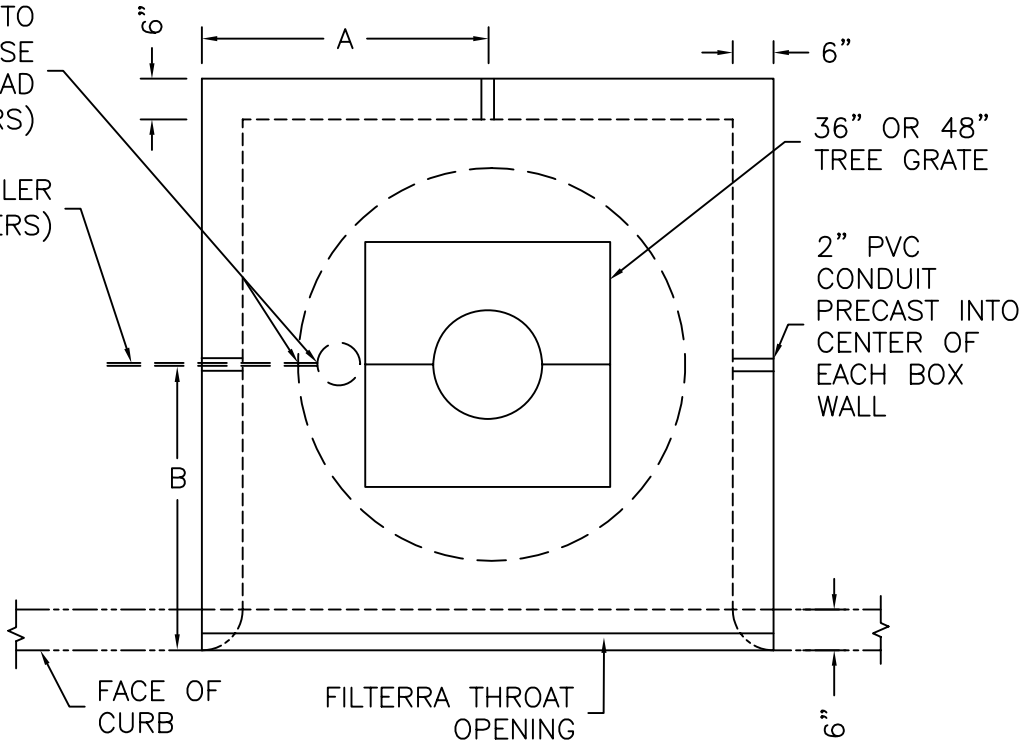


| UNIT SIZE | A | B |
|---|---|---|
| 4 x 6.5 | 2'–6" | 3'–9" |
| 4 x 8 | 2'–6" | 4'–6" |
| 6.5 x 4 | 3'–9" | 2'–6" |
| 6 x 6 | 3'–6" | 3'–6" |
| 6 x 8 | 3'–6" | 4'–6" |
| 6 x 10 | 3'–6" | 5'–6" |
| 6 x 12 | 3'–6" | 6'–6" |
| 8 x 6 | 4'–6" | 3'–6" |
| 8 x 6 | 4'–6" | 3'–6" |
| 10 x 6 | 5'–6" | 3'–6" |
| 12 x 6 | 6'–6" | 3'–6" |

PLAN VIEW

MODIFICATIONS OF DRAWINGS ARE ONLY PERMITTED BY WRITTEN AUTHORIZATION FROM FILTERRA

DRAWING AVAILABLE IN TIF FILE FORMAT.

AMERICAST®

Copyright © 2007 by Americast

DATE: 08–09–06 DWG: FTIRR–1

**FILTERRA® IRRIGATION PLANNING LAYOUT**

filterra®

US PAT 6,277,274 AND 6,569,321

# Section D

Filterra® Technical Section

Toll Free: (866) 349-3458
Fax: (951) 359-3439
design@filterra.com

**www.filterra.com**

# Americast Filterra® Weights and Lifting Details
# WESTERN ZONE

| | | Top Only | | Box + Media | | *Spreader Bar | |
|---|---|---|---|---|---|---|---|
| | | Pounds | Tons | Pounds | Tons | Min | Max |
| 4'-0" Throat | 4x4 | 1,808 | 0.90 | 9,180 | 4.59 | 5.00 ft | 7.50 ft |
| | 4x6.5 | 3,178 | 1.59 | 13,994 | 7.00 | 5.08 ft | 7.58 ft |
| | 4x8 | 3,829 | 1.91 | 16,035 | 8.02 | 5.00 ft | 7.50 ft |
| | 4.5x8.5 | 4,562 | 2.28 | 18,368 | 9.18 | 5.50 ft | 7.50 ft |
| 6'-0" Throat | 6.5x4 | 3,151 | 1.58 | 13,784 | 6.89 | 5.58 ft | 7.58 ft |
| | **Std 6x6** | **4,221** | **2.11** | **17,051** | **8.53** | **7.00 ft** | **9.00 ft** |
| | 6x8 | 5,121 | 2.56 | 21,649 | 10.82 | 7.00 ft | 9.00 ft |
| | 6x10 | 6,545 | 3.27 | 26,248 | 13.12 | 7.00 ft | 9.00 ft |
| | 6x12 | 6,997 | 3.50 | 31,702 | 15.85 | 7.08 ft | 9.08 ft |
| 8'-0" Throat | 8x4 | 3,787 | 1.89 | 15,725 | 7.86 | 5.50 ft | 7.50 ft |
| | 8.5x4.5 | 4,519 | 2.26 | 18,058 | 9.03 | 6.00 ft | 8.00 ft |
| | 8x6 | 5,100 | 2.55 | 21,494 | 10.75 | 7.50 ft | 9.50 ft |
| 10'-0" Throat | 10x6 | 6,503 | 3.25 | 25,938 | 12.97 | 7.50 ft | 9.50 ft |
| 12'-0" Throat | 12x6 | 6,933 | 3.47 | 31,199 | 15.60 | 7.58 ft | 9.58 ft |

*** BOX AND TOP MUST BE LIFTED SEPARATELY**

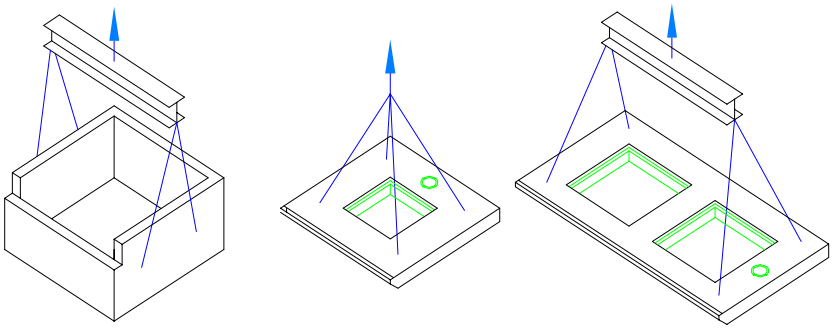

* A 7.50 ft spreader bar is suitable for all sizes shown and is **always needed** for safe lifting of all box sizes.

6/2/2008

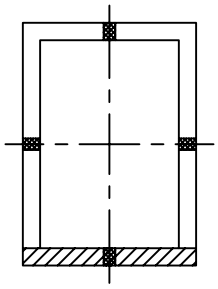

4X6.5B

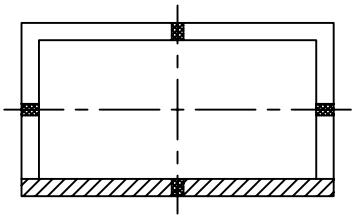

8X4B

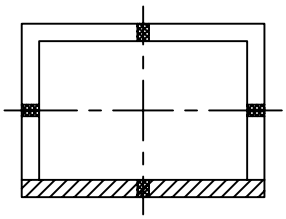

6.5X4B

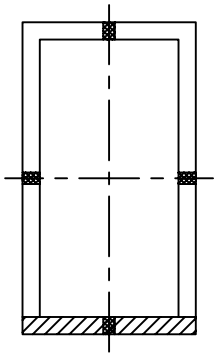

4X8B

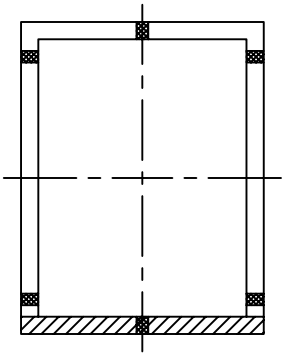

6X8B

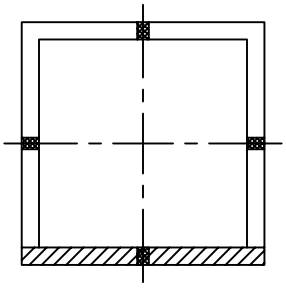

6X6B

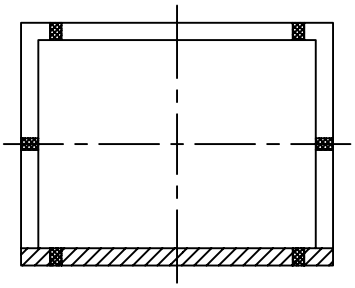

8X6B

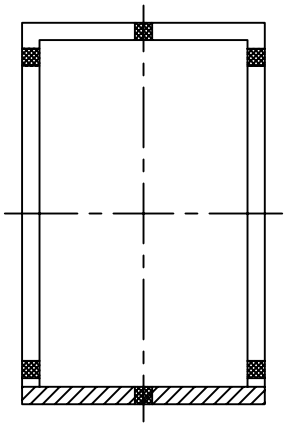

6X10B

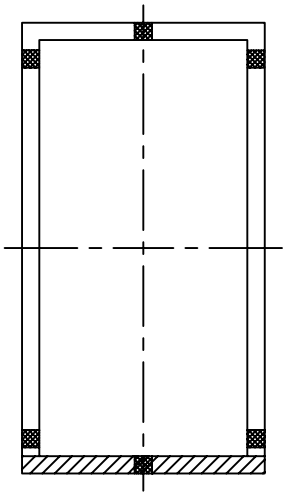

6X12B

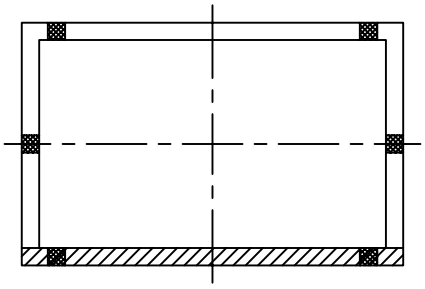

10X6B

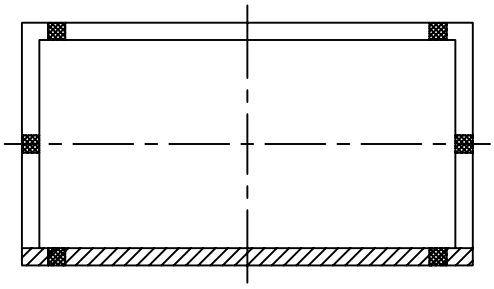

12X6B

MODIFICATIONS OF DRAWINGS ARE ONLY PERMITTED BY WRITTEN AUTHORIZATION FROM FILTERRA

DRAWING AVAILABLE IN TIF FILE FORMAT.

AMERICAST®

Copyright © 2007 by Americast

DATE: 01-05-06 | DWG: FTOPC-1

**FILTERRA® PVC OUTLET PIPE COUPLING LOCATIONS**

filterra®

US PAT 6,277,274 AND 6,569,321

# Filterra® Piping Technical Details

Filterra® is supplied with an internal underdrain system that exits a wall in a perpendicular direction. Most efficient drainage is accomplished when the drain exits on the lower side of the Filterra®, i.e. nearest the overflow bypass. This is more important when using the larger sized Filterras®.

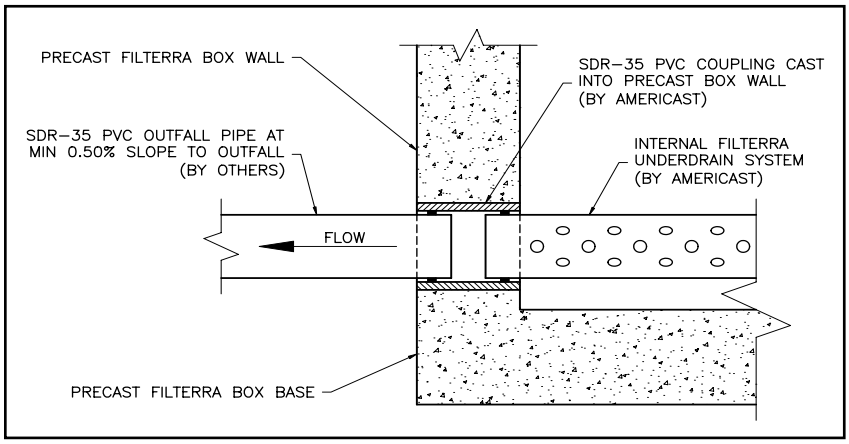


*Drawing DP1:*
*Section View through Filterra Precast Box Wall at Outfall Pipe Connection*

All units are supplied with the drainage pipe coupling precast into the wall, at a depth of 3.50 feet (INV to TC). Drawing DP1 is a detail of the coupling. The coupling used is SDR-35 PVC.

Typically, a minimum slope of 0.50% is adequate to accommodate the flow of treated water from the Filterra®, but each site may present unique conditions based on routing of the outfall pipe (elbows). The pipe must not be a restricting point for the successful operation of Filterra®. All connecting pipes must accommodate freefall flow. Table 3 lists expected flow rates of the various size Filterra® units and these flow rates can be used to confirm or calculate the minimum outfall pipe slope.

Table 3: Filterra Flow Rates & Pipe Details

| Filterra® Size (feet) | Expected Flow Rate (cubic feet/second) | Connecting Drainage Pipe |
|---|---|---|
| 4x6.5 or 6.5x4 | 0.061 | 4” SDR-35 PVC |
| 4x8 or 8x4 | 0.075 | 4” SDR-35 PVC |
| 6x6 | 0.084 | 4” SDR-35 PVC |
| 6x8 or 8x6 | 0.112 | 4” SDR-35 PVC |
| 6x10 or 10x6 | 0.140 | 6” SDR-35 PVC |
| 6x12 or 12x6 | 0.168 | 6” SDR-35 PVC |

# Filterra® Modified Options: Recessed Tops

Modified recessed top with mulch

Filterra® modified recessed tops allow a seamless integration using pavers, mulch or sod.

NOTE: Modified recessed tops increase the depth of the Filterra® invert out.

Modified recessed top prior to shipping

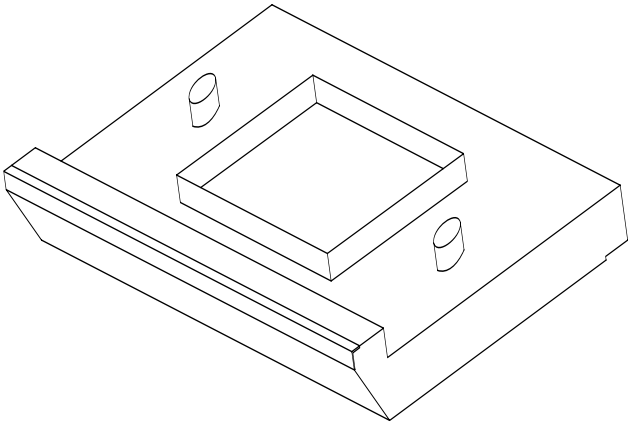

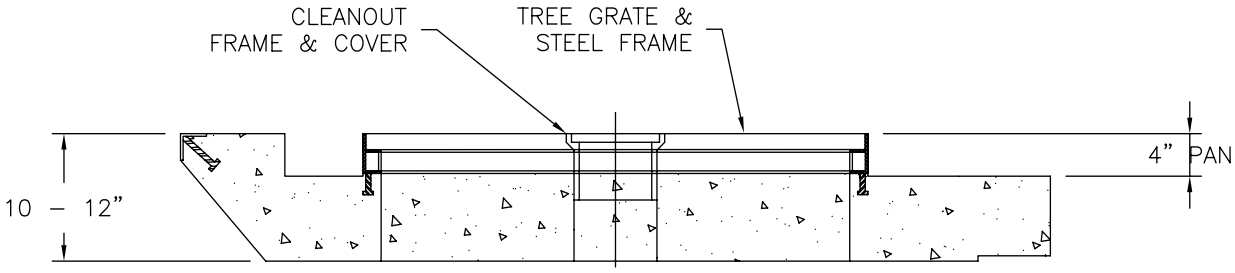

# Filterra® Modified Options: Ornamental Grates

Modified colored grates are plastic coated to reduce corrosion. All grates are available in 36” and 48”. Some modified grates may not be ADA compliant. For additional options please call (866) 349-3458.

FT Radial

Color Choices: ■ Black ■ Green

FT New Orleans

Color Choices: ■ Black ■ Green

UA Standard Flat

UA Title-24

UA OT Title- 24

UA Chinook

# Common Filterra® Placements

Providing aesthetics and treatment in a residential area.

Typical Filterra placement at a fast food chain.

Even the largest Filterra unit blends in with landscaping.

Filterra used with a flumed bypass in a commercial parking lot.

Ideal for stormwater treatment where space is tight.

High flows bypass Filterra into a grass swale.

# Filterra® Plant Selections

The Filterra® Stormwater Bioretention Filtration System harnesses the power of nature to capture, immobilize and cycle pollutants to treat stormwater runoff. Trees, grasses and shrubs do more than make it attractive; they also enhance pollutant removal.

Above ground, the system's shrubs, grasses or trees add beauty and value to the urban landscape. Underground, nature's complex physical, chemical and biological processes are hard at work removing a wide range of non-point source pollutants from treated stormwater. Pollutants are decomposed, volatilized and incorporated into the biomass of Filterra's micro/macro fauna and flora.

A wide range of plants are suitable for use in bioretention systems, and a list is available indicating those suitable for use with Filterra. The selection varies by location according to climate.

Additional photos are available at www.filterra.com. Some of the most popular selections to date are shown below:

Filterra® with Heavenly Bamboo

Filterra® with Foster Holly

Filterra® with Yedda Hawthorn

Filterra® with Crape Myrtle

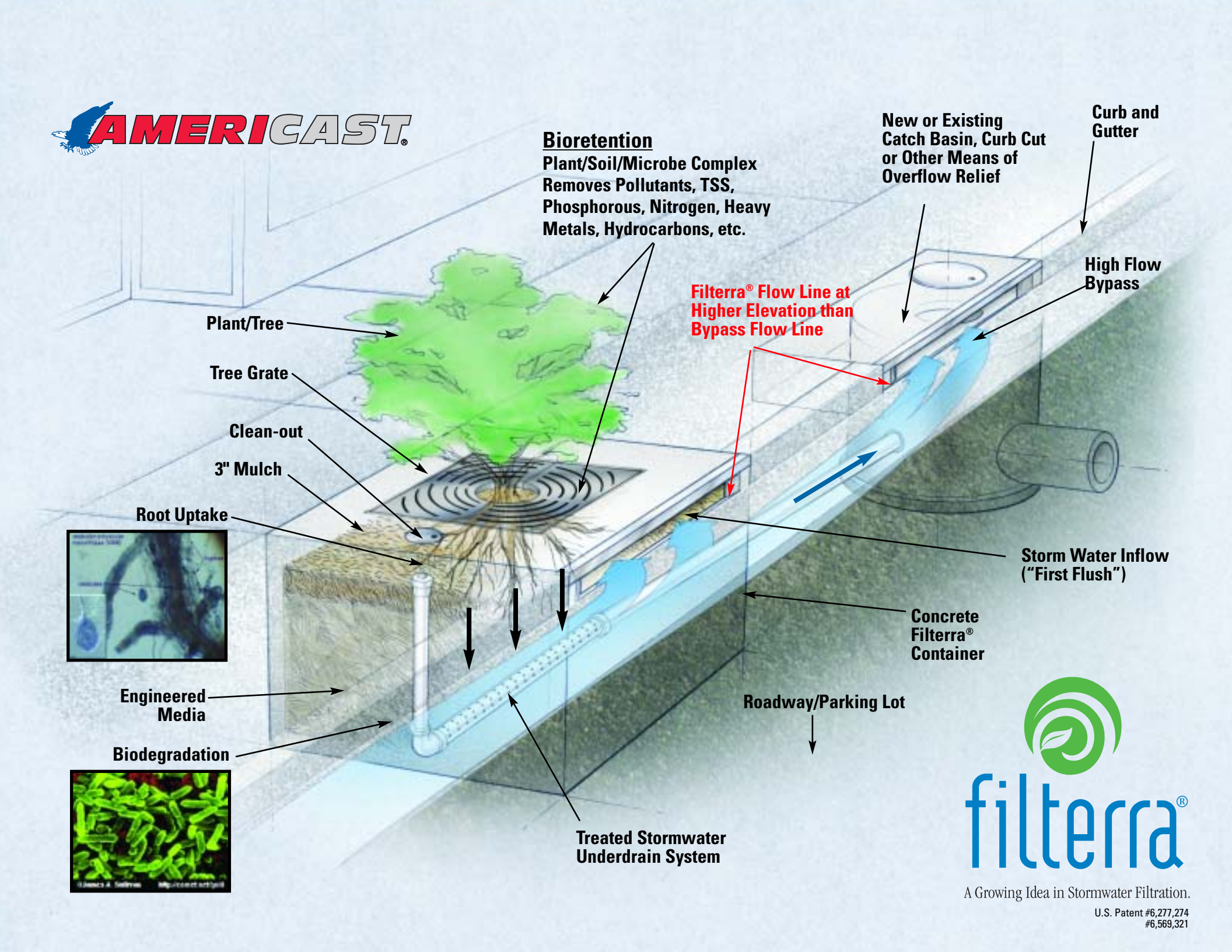
AMERICAST®
Bioretention
Plant/Soil/Microbe Complex Removes Pollutants, TSS, Phosphorous, Nitrogen, Heavy Metals, Hydrocarbons, etc.
New or Existing Catch Basin, Curb Cut or Other Means of Overflow Relief
Curb and Gutter
High Flow Bypass
Filterra® Flow Line at Higher Elevation than Bypass Flow Line
Plant/Tree
Tree Grate
Clean-out
3" Mulch
Root Uptake
Storm Water Inflow ("First Flush")
Concrete Filterra® Container
Engineered Media
Biodegradation
Roadway/Parking Lot
Treated Stormwater Underdrain System
filterra®
A Growing Idea in Stormwater Filtration.
U.S. Patent #6,277,274
#6,569,321

www.BelgardDesignPro.com

# Permeable Interlocking Paving Stone Installation Specification

## 2008

**877-Belgard www. Belgard.biz**

### Introductory Information

This suggested specification has been prepared to provide general information and guidance to specifiers, engineers, contractors and superintendents who are involved in the design and construction of permeable interlocking concrete paving stone pavements. A qualified engineer must evaluate the suitability of the pavement design, soil conditions, site conditions and insure proper installation during critical applications.
Permeable interlocking paving stones are produced as precision modular units. The units when properly engineered and installed are capable of supporting structural loads as well as allowing surface water infiltration into an engineered base receptor.

## SUGGESTED SPECIFICATION FOR THE CONSTRUCTION OF PERMEABLE INTERLOCKING CONCRETE PAVEMENTS

**SECTION 321413**
**PERMEABLE INTERLOCKING CONCRETE PAVERS**

### PART 1 – GENERAL

### 1.01 SECTION INCLUDES

A. Concrete pavers
B. Bedding and void opening aggregates
C. Aggregate Base
D. Edge restraint

### 1.02 RELATED SECTIONS

**Note:** The following related sections refer to standard specifications available from local municipalities or highway agencies or from major specification writing agencies such as the Federal Highway Administration (FHWA), the National Stone Association (NSA), the National Concrete Pavement Association (ACPA), the National Asphalt Producers Association (NAPA), the National Institute of Building Science (NIBS), National Master Specifications (NMS) and the American Society for Testing and Materials (ASTM).

A. Section: [ - ] - Curbs and Drains.
B. Section: [ - ] - Aggregate Base.
C. Section: [ - ] - Cement Treated Base.
D. Section: [ - ] - Asphalt Treated Base.
E. Section: [ - ] - Overlays of Asphalt and Concrete Pavements
F. Section: [ - ] - Roofing Materials.
G. Section: [ - ] - Bitumen and Neoprene Setting Bed, Acrylic Fortified Mortar Setting Bed.
H. Section: [ - ] - Geotextiles.
I. Section: [ - ] - Unshrinkable Fill.

## 1.03 REFERENCES

A. American Society of Testing and Materials (ASTM)

**Note:** In order to determine the latest version of the listed specifications and standards, please consult the ASTM web site (**www.astm.com**).

1. **C 33** Specification of Concrete Aggregates.
2. **C 136** Method for Sieve Analysis for Fine and Course Aggregate.
3. **C 140** Sampling and Testing Concrete Masonry Units.
4. **C 144** Standard Specifications for Aggregate for Masonry Mortar.
5. **C 936** Specifications for Solid Interlocking Concrete Paving Units.
6. **C 979** Specifications for Pigments for Integrated Colored Concrete.
7. **D 698** Test Methods for Moisture Density Relations of Soil and Soil Aggregate Mixtures Using a 5.5-lb (24.4 N) Rammer and 12 in. (305 mm) drop.
8. **D1557** Test Method for Moisture Density Relations of Soil and Soil Aggregate Mixtures Using a 10- lb (44.5 N) Rammer and 18 in. (457 mm) drop.
9. **D 2940** Graded Aggregate Material for Bases or Subbases for Highway or Airports.
10. **C 29** Bulk Density and Voids in Aggregate Materials

**Note:** Street, Industrial, port and airport pavement thicknesses should be designed in consultation with a qualified civil engineer, in accordance with established flexible pavement design procedures and in accordance with the Interlocking Concrete Pavement Institute Technical Bulletins. Sample construction cross section detail drawings are available from Oldcastle.

## 1.04 QUALITY ASSURANCE

A. Installation shall be by a contractor and crew with at least one year of experience in placing interlocking concrete pavers on projects of similar nature or dollar costs.
B. The Contractor shall be in compliance with all local, state and federal licensing and bonding requirements.

## 1.05 SUBMITTALS

A. Shop or product drawings and product data shall be submitted.
B. Full size samples of the Permeable concrete paving unit shall be available to indicate color and product shape. Color will be selected from Northfield Block Company's available colors.
C. Sieve analysis for grading of bedding and joint opening aggregates shall be submitted.
D. Testing from an independent testing laboratory for compliance of paving unit requirements to ASTM C 936 or other applicable requirements shall be made available.

## 1.06 MOCK-UPS

A. A 7 ft. x 7 ft. (2m x 2m) paver area shall be installed.
B. This area will be used to determine joint sizes, lines, laying pattern(s), color(s), and texture of the project.
C. This area shall be the standard from which all work will be judged.

## 1.07 DELIVERY, STORAGE AND HANDLING

A. Concrete pavers shall be delivered to the site in steel banded, plastic banded, or plastic wrapped cubes capable of transfer by fork lift or clamp lift. The pavers shall be unloaded in such a manner that no damage occurs to the product.
B. Delivery and paving schedules shall be coordinated in order to minimize interference with normal use of buildings adjacent to paving.

## 1.08 ENVIRONMENTAL CONDITIONS

A. Do not install bedding aggregates or pavers during heavy rain or snowfall.
B. Do not install bedding aggregates or pavers over frozen base materials.
C. Do not install frozen bedding aggregates.

# PART 2 – MATERIALS

## 2.01 CONCRETE PAVERS (Permeable)

A. Supplied by: *see manufacturer list on page 7*.
B. Permeable concrete paving stone(s), _____ color(s),
_____ in. x _____ in. (____ mm x ____ mm) and 3.15 in. (80 mm) thick.
C. Paving stone units shall meet the minimum material and physical properties set forth in ASTM C 936, Standard Specification for Interlocking Concrete Paving Units.
Efflorescence shall not be a cause for rejection.

**Note:** Permeable concrete paving stones are manufactured with spacer bars on each unit. These spacer bars insure a proper and precise joint spacing between all paving stones units. Spacer bars establish proper spacing between units during installation.

**Note:** Efflorescence is a whitish powder-like deposit that sometimes appears on concrete products. Calcium hydroxide and other water-soluble materials form or are present during the hydration of Portland cement. Water combines with these materials, and can migrate to the surface of the concrete. When this water evaporates, the soluble materials remain as a whitish deposit on the concrete surface. The calcium hydroxide is converted to calcium carbonate during a reaction with carbon dioxide from the atmosphere. The calcium carbonate is difficult to remove with water. However, efflorescence will wear off in time and it is advised to wait a few months before attempting to remove any efflorescence. Commercially available cleaners can be used, provided directions are carefully followed. Some cleaners contain acids that may alter the color of the pavers.

**Note:** Permeable paver units are 3.15 in. (80 mm) in thickness and compressive strength test results should be adjusted by multiplying them by 1.18 to equate the results to that from 2.3622 in. (60 mm) thick paver units. Please refer to ICPI Tech Spec 9 (Revised August 2007) Part 2 products 2.01 interlocking concrete pavers / B / d / note.

1. Average compressive strength 8000 psi (55MPa) with no individual unit under 7,200 psi (50 MPa).
2. Average absorption of 5% with no unit greater than 7% when tested according to ASTM C 140.
3. Resistance to 50 freeze-thaw cycles when tested according to ASTM C 67.

D. Pigment in concrete pavers shall conform to ASTM C 979. ACI Report No. 212.3R provides guidance on the use of pigments.

## 2.02 GRANULAR SUBBASE

The granular subbase material shall consist of granular material graded in accordance with ASTM D 2940, *the subbase thickness and specific aggregate gradation shall be determined by the Designing Engineer*.

## 2.03 GRANULAR BASE

The granular base material shall be graded in accordance with the requirements of ASTM D 2940, *the granular base thickness and specific aggregate gradation shall be determined by the Designing Engineer*.

## 2.04 BEDDING AND VOID OPENING AGGREGATES

The granular bedding material shall be graded in accordance with the requirements of ASTM D 2940, the typical bedding thickness is between 1 1/2 & 2 inches and *the specific aggregate gradation shall be determined by the Designing Engineer*.

## 2.05 EDGE RESTRAINTS

The provision of suitable edge restraints is critical to the satisfactory performance of interlocking concrete block pavement. The pavers must abut tightly against the restraints to prevent rotation under load and any consequent spreading of joints. The restraints must be sufficiently stable that, in addition to providing suitable edge support for the paver units, they are able to withstand the impact of vehicular traffic and/or snow removal equipment.

Curbs, gutters or curbed gutter, constructed to the dimensions of municipal standards (noting that these standards generally refer to cast-in-place concrete sections), are considered to be acceptable edge restraints for heavy duty installations. Where extremely heavy industrial equipment is involved such as container handling equipment, the flexural strength of the edge restraint should be carefully reviewed, particularly if a section that is flush with the surface is used and may be subjected to high point loading.

# PART 3

## 3.01 EXAMINATION

**Note:** For installation on compacted aggregate base and soil subgrade, the specifier should be aware that the top surface of the pavers may be 1/8 in. to 1/4 in. above the final elevations after compaction. This difference in initial and final elevation is to compensate for possible minor settling.

A. Verify that subgrade preparation, compacted density and elevations conform to the specifications.

**Note:** Compaction of the soil subgrade should be based on the recommendations of the Designing Engineer and should be measured in Modified Proctor density per ASTM D 1557. The Architect/Engineer should inspect subgrade preparations, elevations and conduct density tests for conformance to specifications.

B. Verify that geotextiles, if applicable, have been placed according to specifications and drawings.
C. Verify that aggregate base materials, thickness, compaction, surface tolerances and elevations conform to the specifications.

**Note:** The aggregate base should be spread and roller compacted in uniform layers not exceeding 6 in. thickness. Recommended base surface tolerance should be plus or minus 3/8 in. over a 10 ft straight edge. The Architect/Engineer should inspect geotextile materials and placement (if applicable), base preparation, surface tolerances, elevations and conduct density tests for conformance to specifications.

**Note:** Mechanical tampers (jumping jacks) are recommended for compaction of soil subgrade and aggregate base around lamp standards, utility structures, building edges, curbs, tree wells and other protrusions. Areas not accessible to roller compaction equipment should be compacted to the specified density with mechanical tampers. CAUTION – Care shall be taken around the perimeters of excavations, buildings, curbs, etc. These areas are especially prone to consolidation and settlement. Wedges of backfill should not be placed in these areas. If possible, backfilling and compacting in these areas particularly should proceed in shallow lifts, parallel to the finished surface.

D. Verify the proper installation of the concrete curbing, in terms of location, elevation, and adherence to the specifications.
E. Verify that the base is dry, uniform, even and ready to support aggregate, pavers and imposed loads.
F. Beginning of bedding course aggregates and paver installation shall signify acceptance of the base and concrete curb edge restraints.

## 3.02 SITE PREPARATION

A. The site must be stripped of all topsoil and other objectionable materials to the grades specified.
B. All subdrainage of underground services within the pavement area must be completed in conjunction with subgrade preparation and before the commencement of subbase construction.
C. After trimming to the grades specified, the pavement is to be proof rolled to a percentage of Standard Proctor Maximum Dry Density as specified by the Designing Engineering with soft spots or localized pockets of objectionable material excavated and properly replaced with approved granular material.
D. The subgrade shall be trimmed to within 0 to 1/2 in. of the specified grades. The surface of the prepared subgrade shall not deviate by more than 1/2 in. from the bottom edge 10 ft. straight edge laid in any direction.
E. The Contractor shall insure that the prepared subgrade is protected from damage from intrusion of surface water. No traffic shall be allowed to cross the prepared subgrade. Repair of any damage resulting shall be the responsibility of the Contractor and shall be repaired.
F. Under no circumstances shall further pavement construction proceed until the subgrade has been inspected by the Owner, Agent or the Consultant.

## 3.03 GRANULAR SUBBASE AND BASE INSTALLATION

A. After proper construction of the concrete curb edge restraints for the interlocking pavement as per Section 3.04, and upon approval by the Owner, Agent or Consultant, aggregate subbase (is specified in design) and base shall be placed in uniform lifts not exceeding 6 in loose thickness and roller compacted according to AASHTO guidelines for installing open graded aggregates.
B. The subbase shall be placed in uniform lifts not exceeding 6 inch loose thickness and roller compacted according to AASHTO guidelines for installing open graded aggregates.

   Subbase thickness shall be _____ in.

   Base thickness shall be _____ in.

C. The granular base, as an example: shall be trimmed to within to within 0 to 3/8 in. of the specified grade. The surface of the prepared base shall not deviate more than 3/8 in. from the bottom edge of a 10 ft. straight edge laid in any direction. The final decision of the allowable base deviation shall be determined by the Designing Engineer.
D. Before commencing the placing of bedding aggregate course and the placement of the Permeable concrete pavers, the base shall be inspected by the Owner, Agent or the Consultant.

## 3.04 EDGE RESTRAINTS

A. Adequate concrete edge restraint shall be provided along the perimeter of all paving as specified. The leading edge of the concrete restraint, where it contacts the paving stone shall be fit parallel along the edge of the paving units.
B. All concrete edge restraints shall be constructed to dimensions and profiles specified and shall be supported by a compacted subbase of not less than 6 in. thickness.
C. Concrete used for the construction of the edge restraints shall be air-entrained and have a minimum compressive strength as specified. All concrete shall be in accordance with ASTM C 94 requirements.

## 3.05 PAVER INSTALLATION

A. Spread the bedding aggregate evenly over the base course and screed to a nominal 1 1/2 in. to 2 in. thickness. Use tracked equipment only and insure that the bedding aggregate are not be disturbed. Place sufficient bedding aggregate to stay ahead of the laid pavers. Do not use the bedding aggregate to fill depressions in the base surface.

B. Pavers shall be free of foreign material before installation.
C. Pavers shall be inspected for color distribution and all chipped, damaged or discolored pavers shall be replaced.
D. The pavers shall be laid in pattern(s) as shown on the drawings.
E. Joints between the pavers shall be maintained according to the spacer bars.
F. Gaps at the edges of the paved area shall be filled with cut pavers.

**Note:** Units cut no smaller than one-third of a whole paver are recommended along edges subject to vehicular traffic.

G. Pavers to be placed along the edge shall be cut with a double blade paver splitter of masonry saw.
H. The paver surface shall be swept clean of all debris before compacting, in order to avoid damage from point loads.
I. A low amplitude, high frequency plate compactor shall be used to compact the pavers into the bedding course. Use Table 5 below to select size of compaction equipment:

**TABLE 5**
**PAVER THICKNESS AND REQUIRED MINIMUM COMPACTIVE FORCE**

| PAVER THICKNESS | COMPACTIVE FORCE |
|---|---|
| 3.1496 in. (80 mm) | 5000 lbs (22kN) |

J. The pavers shall be compacted and joint aggregate swept into the joints until the joints are full. This will require a least two or three passes with the compactor. Do not compact within 3 ft. of any unrestrained edges of the laid paving units.
K. All work to within 3 ft. of the laying face must be fully compacted with filled with joint aggregate at the completion of each day.
L. Excess joint aggregates shall be swept off when the job is complete.
M. The final surface elevations shall not deviate more than 3/8 in, under a 10 ft straight edge or at a tolerance that the Designing Engineer specifies.
N. The surface elevation of pavers shall be 1/8 in. to 1/4 in. above adjacent drainage inlets, concrete collars or channels.

## 3.06 FIELD QUALITY CONTROL

A. Final elevations shall be checked for conformance to the drawings after removal of excess joint aggregate.

## PART 4 – PRODUCTS

### 4.01 Permeable Interlocking Concrete Pavers

A. Supplied by a Belgard manufacturer:

**WEST:**

**Amcor Masonry Products**
333 South Redwood Road
North Salt Lake, UT 84054
800-800-4004
801-936-5470 Fax

**Sierra Building Products**
10714 Poplar Avenue
Fontana, CA 92337
866-749-3038
909-355-6444 Fax

**Superlite**
4223 W. Highland Avenue
Phoenix, AZ 85019
833-366-7877
602-352-0101 Fax

**Central Premix-Sakrete**
16310 East Marietta Lane
Spokane, WA 99216
800-950-6290
509-926-8367 Fax

**Texas Masonry Supply**
400 Jewell Drive
Waco, TX 76712
800-792-3216
254-772-6999 Fax

**MIDWEST:**

**Miller / Rhino Materials**
4201 Powell Drive
Bonner Springs, KS 66012
866-761-4552
913-667-1796 Fax

**Northfield / Bend**
One Hunt Court
Mundelein, IL 60060
847-557-5008
877-222-1557 Fax

**4D / Schuster's**
426 East River
Midland, MI 48640
989-631-0400
800-227-6512 Fax

**NORTHEAST:**

**Anchor Concrete Products**
1913 Atlantic Avenue
Manasquan, NJ 08736
800-682-5625
732-292-2650 Fax

800 Uhler Road
Easton, PA 18040
610-923-5000
610-923-5005 Fax

**Betco Supreme**
7920 Notes Drive
Manassas, VA 20109
800-580-5838
410-793-0657 Fax

P.O. Box 3388
2630 Conway Road
Crofton, MD 21114
800-580-5838
410-793-0657

**Foster Southeastern**
46 Spring Street
Holbrook, MA 02343
800-462-2225
781-767-2991 Fax

**Domine**
735 Wangum Road
Fishers, NY 14453
800-444-2103

**SOUTH:**

**Adams Products Company**
P.O. Box 14489
Greensboro, NC 27415
800-446-7421
336-375-8259 Fax

**Georgia Masonry Supply**
1443 Battle Creek Road
Jonesboro, GA 30236
800-621-5222
770-471-2128 Fax

**Oldcastle Coastal**
7167 Interpace Road
West Palm Beach, FL 33407
888-321-2354
813-783-2728 Fax

# Appendix C: Master Covenant and Agreement

**Insert Covenant Agreement here**

RECORDING REQUESTED BY AND MAIL TO:

COUNTY OF LOS ANGELES
DEPARTMENT OF PUBLIC WORKS
BUILDING AND SAFETY DIVISION
900 S. FREMONT AVENUE, 3RD FLOOR
ALHAMBRA, CA 91803-1331

Space above this line is for Recorder's use

# MAINTENANCE COVENANT FOR STANDARD URBAN STORMWATER MITIGATION PLAN (SUSMP) REQUIREMENTS

Pursuant to Section 106.4.3 of the County of Los Angeles Building Code and Title 12, Chapter 12.80 of the Los Angeles County Code relating to the control of pollutants carried by stormwater runoff, structural and/or treatment control Best Management Practices (BMPs) have been installed on the following property:

LEGAL DESCRIPTION

ASSESSOR'S ID #_____TRACT NO._____LOT NO._____

ADDRESS: _____

_____

REFERENCE

PLAN CHECK NO.: _____ DISTRICT OFFICE NO.: _____

I (we)_____, hereby certify that I (we) am (are) the legal owner(s) of
(Legal Name of Property Owners)
property indicated above, and as such owners for the mutual benefit of future purchasers, their heirs, successors, and assigns, do hereby fix the following protective conditions to which their property, or portions thereof, shall be held, sold and/or conveyed.

That owner(s) shall maintain the drainage devices such as paved swales, bench drains, inlets, catch basins, downdrains, pipes, and water quality devices on the property indicated above and as shown on plans permitted by the Los Angeles County Department of Public Works and as outlined in the attached "OPERATION AND MAINTENANCE GUIDELINES", in a good and functional condition to safeguard the property owners and adjoining properties from damage and pollution.

That owner(s) shall conduct maintenance inspection of all Structural or Treatment Control BMPs on the property at least once a year and retain proof of the inspection. Said maintenance inspection shall verify the legibility of all required stencils and signs and shall repaint and label as necessary.

That owner(s) shall provide printed educational materials with any sale of the property that provide information on what stormwater management facilities are present, the type(s) and location(s) of maintenance signs that are required, and how the necessary maintenance can be performed.

Owner(s):

By:_____ Date:_____

By:_____ Date:_____

(PLEASE ATTACH NOTARY)

# APPENDIX D: Operation and Maintenance of BMPs

**BMP Inspection Log**

**BMP: _____**

| Inspector Name and Date | Maintenance Performed | Re-Inspection Date | Comments |
|---|---|---|---|
| | | | |
| | | | |
| | | | |
| | | | |
| | | | |
| | | | |
| | | | |
| | | | |
| | | | |
| | | | |
| | | | |
| | | | |
| | | | |
| | | | |
| | | | |
| | | | |
| | | | |
| | | | |
| | | | |
| | | | |
| | | | |
| | | | |
| | | | |
| | | | |
| | | | |

# Filterra® Maintenance Steps

1. Inspection of Filterra and surrounding area

2. Removal of tree grate and erosion control stones

3. Removal of debris, trash and mulch

4. Mulch replacement

5. Clean area around Filterra

6. Complete paperwork and record plant height and width

For additional information please contact your local Filterra sales representative.
Eastern Zone: 866-349-3458, Western Zone: 877-345-1450.

© 2007 Filterra

# Maintenance

While the technology behind the Filterra system is complex, maintenance is not. Unlike competitive systems the first year of maintenance is FREE and an extended maintenance agreement is also available.

After your first year of free maintenance you may choose from the following options to ensure your units are operating correctly, and help to ensure compliance with local regulatory requirements.

**1.** Following your observation of the simple maintenance steps during the first year of the included maintenance, you can easily and safely complete the maintenance yourself! An Operation and Maintenance Manual with photographic instruction is provided to every owner.

**2.** Extended maintenance service is available from Filterra. For between $325 - $800 per unit, per year, depending on number and size of units, Filterra will maintain your units, contact us at maintenance@filterra.com for details and pricing.

**3.** Filterra also offers an onsite maintenance demonstration. Included with every standard demonstration is a Filterra maintenance training DVD which covers all aspects of the maintenance steps needed to meet our specifications. Cost varies dependent upon geographic location. Contact us at maintenance@filterra.com for more information or to schedule your demonstration.

- Avoid legal challanges from your jurisdiction's maintenance enforcement program.
- Prolong the expected lifespan of your Filterra media.
- Avoid more costly media replacement.
- Help reduce pollutant loads leaving your property.

# BASS Maintenance and Operating Procedures

Segmental permeable pavement systems typically will require periodic visual inspections (preferably after a major rainstorm) to determine that the stormwater is infiltrating into the system. Areas that have pooled water standing on the surface need to be addressed as a remedial repair as opposed to normal maintenance.

## Normal Maintenance:

Permeable paver surfaces and adjoining pavement surfaces will require standard structural BMP practices for pavement maintenance regarding sweeping procedures. A dry vacuum type sweeper may be used during dry periods to remove encrusted sediment, leaves, grass clippings, etc. Vacuum and sweeper settings may require adjustments to prevent uptake of aggregate from the paver voids and joints. Once a year sweeping is normal unless excessive silts and fines are present, which will require additional monitoring of surface to determine silt build-up and then adjust sweeping schedule to remove accumulated debris. Additional void materials may be added by mechanically or manually sweeping into joints and void areas if necessary. Refer to specifications for type and grade. Closed joint permeable pavement systems may be pressure washed if desired. Care should be exercised to keep wand at an angle and away from surface to prevent abrading of surface and blasting of void material from joints and void openings. It is not recommended to utilize pressure washer on open-jointed systems.

Adjacent properties, pavements, landscaped areas and grasses should be monitored periodically to ensure that run-off from these sources is not depositing silts and debris on the permeable surface. Construction traffic, agricultural areas ( no ground cover), beach area, areas subject to high winds that will carry these fine particles, will require more frequent sweeping than urban areas.

It is recommended that a monitoring well be installed with the system and will provide for access to bottom of system for observation for rate of ex-filtration. In addition, water samples may be removed to permit water quality to be analyzed. This should be done once on an annual basis.

Settlements in pavement surface, access for utility repair, removal of broken or damaged pavers may be performed by an experienced paver installer. Pavers will be removed, setting bed and void materials will be salvaged and kept separate. Base materials are to be removed if access for utilities is required, Settlement repair depending on depth will be restored with additional base materials if settlement exceeds ½”. Setting bed will be made level and pavers re-instated with void materials replaced in joints and voids with compaction bringing the pavers to flush condition and ready to use.

**Remedial Maintenance:**

Application of a commercial vacuum sweeper with water jets, sweeper and vacuum bar attachment will cause evacuation of clogged void materials from joint and void openings. This material may be recycled at a wash site or new aggregate materials may be utilized. (Refer to specifications for size and grade) Jointing materials are to be swept into joints and void openings until full, typically the bottom of chamfer is full.

**Winter Maintenance:**

Snow Removal:

A four season parking surface, street or plaza my be plowed with truck-mounted blades, power brooms, snow-blowers or manually shoveled, however bladed vehicles will require snow plows with shoes.

Salt may be used to melt ice, but will affect the quality and pH of water leaving BASS and will require additional monitoring and analysis. Sand should not be used as will accelerate rate of clogging in voids and will require increased frequency of sweeping. Open-graded chips may used for traction when ice is present, but more than likely will require sweeping and removal in the spring.

4. **Maintenance:**
    - Periodic inspections of the inlet and outlet areas to ascertain correct operation of system and to clean materials trapped on grates protecting catch basins and inlet area should be required monthly.
        - Routine sweeping and cleaning of impervious drainage areas will reduce floatables and sediment loading to underground stormwater storage.
    - The primary maintenance concerns are removal of floatables that become trapped and removal of accumulating sediments within the system; this should be done at least on an annual basis. Proprietary traps and filters associated with stormwater storage units should be maintained as recommended by the manufacturer.
        - Confined space safety procedures must be followed by workers entering an underground stormwater storage facility.
        - Sediments are best removed mechanically rather than flushing. If flushing is the only option then great care must be taken not to flush sediments downstream into native waters.
    - Any structural repairs required to inlet and outlet areas should be addressed in a timely manner on an as needed basis.
    - Local authorities may require annual inspection or require that they carry out inspections and maintenance.

# APPENDIX E: Storm Drain Stencil Example

NO DUMPING
THIS DRAINS TO OCEAN

John L. Hunter
AND ASSOCIATES, INC.

# Conceptual NPDES Review

Project Name: Trumark Crestridge

Project Address: 5601 Crestridge Road

A preliminary review and approval of these plans has been made for the purpose of Planning Department approval.

I. Source control BMP(s) for this project

- ☐ Infiltration
- ☒ Biofiltration
  - ☐ Vegetation swales
  - ☐ Engineered planter boxes
  - ☒ Proprietary Devices: 4 - Filterra Units
- ☐ Minimum 10 foot wide vegetation border around residential development with pervious drive way
- ☐ Green Roof
- ☐ Capture and reuse
- ☐ Other (describe and include justification)

II. Post construction runoff must mimic natural conditions

- ☒ 100% of rainfall from the site will flow either into/onto the source control BMP(s), or onto areas of undisturbed natural vegetation.
- ☐ Other (describe and include justification)

It is the developer's responsibility to ensure the proposed structural BMPs will be adequate and suitable for this site. These parameters must be fully developed in **a SUSMP which will be required prior to Building Department permit issuance** This conceptual approval is NOT approval of the SUSMP. This conceptual approval does NOT assure the developer that these BMPs will ultimately be approved.

☒ **Preliminary approval is made with the attached conditions.**

Signature: Date: 5/8/12

John Hunter - NPDES Manager

# Standard Conditions of Conceptual Approval

A complete Standard Urban Stormwater Mitigation Plan must be submitted.

Size, type, and quantity of each treatment BMP must be called out on plans and report.

All required forms can be found at JLHA.net/city/rpv

The applicant needs to decide and list the Anticipated Pollutants of Concern:

At a minimum these will include: trash, nutrients, oil& grease, copper, zinc, lead and cadmium, and bacteria

Describe and show on plans which type of structural BMP will be used, either solely or as a "treatment train" to mitigate these pollutants of concern. Acceptable BMPs are generally:

<u>Infiltration</u>

-Minimum 0.5 inch per hour percolation rate
-pre-filtration required,
-depth to ground water must be in excess of 10 feet below the BMP
-no existing soil contamination

*Proposals for Infiltration BMPs must be accompanied with stamped letter from a geotechnical or soils engineer indicating that soil instability will not occur as a result of this type of BMP*.

<u>Bioswales</u>

-Grass must be kept between 3 and 6 inches high
-Irrigation must be provided
-Must be minimum of 10 feet wide and 1,200 sq feet per acre
-Gravel swales and "dry stream bed" designs may be acceptable
-Pre and post -filtration required
-No standing water within 72 hours of cessation or rainfall

<u>Capture and reuse</u>

- the first flush of runoff may captured in cisterns for reuse as landscape water, etc. (Health Department clearance will be required for the connection to the potable water system.)

<u>Green roofs</u>

-Framing will need to be structurally adequate
-Access to roofs will need to be provided
-Irrigation will be necessary

<u>Boxed media filters</u>

-Specifically designed planters and tree wells are often acceptable as part of a treatment train.

-Designs must follow approved standards

Other innovative designs are encouraged, as long as these will adequately mitigate stormwater pollutants

*[Design standards, which are subject to change, is the runoff from the first ¾ inch of rainfall]*

**NO structural BMPs will be permitted in, above or under the public right-of-way!**

---

Describe how the selected BMP will allow the post-construction volume of runoff from the site to mimic the amount of runoff from site that occurred when the site us undeveloped (i.e. bare soil and brush).

---

Include the specific BMP requirements that could impact the planning review process. Reference: **http://ladpw.org/wmd/NPDES/SUSMP_MANUAL.pdf**

For example: - canopies for fuel dispensing areas
- roofs over outdoor restaurant equipment wash areas
- roofs or high efficiency treatment systems for loading docks

---

It is the applicant's responsibility to propose BMPs that will be adequate, able to be constructed, and meet the most current City and Regional Board requirements for stormwater mitigation.