NEIGHBORHOOD COMPATIBILITY HANDBOOK

CITY OF RANCHO PALOS VERDES

ADOPTED BY THE CITY COUNCIL
ON MAY 6, 2003
AMENDED ON APRIL 20, 2004 AND NOVEMBER 3, 2004

ACKNOWLEDGEMENTS*
NEIGHBORHOOD COMPATIBILITY HANDBOOK

The City Council of the City of Rancho Palos Verdes wishes to express its sincere appreciation to those City Officials and residents who generously gave their time in reviewing and preparing this Handbook. A special word of gratitude is due to the following individuals:

NEIGHBORHOOD COMPATIBILITY (NC) STEERING COMMITTEE

Councilman Larry Clark
Councilman Peter Gardiner
Commissioner Jon Cartwright
Commissioner Frank Lyon
Member Ken Dyda
Member Lois Karp
Member Vic Quirarte
Member Don Shults
Member Diane Weinberger

PLANNING COMMISSION

(April 4, 2000-November 27, 2001)
Frank Lyon, Chairman
Jon Cartwright, Vice-Chairman
Commissioner Larry Clark (Subcommittee Member)
Commissioner Tom Long
Commissioner Craig Mueller
Commissioner Ted Paulson (Subcommittee Member)
Commissioner Don Vannorsdall

CITY STAFF

Joel Rojas, AICP, Director of Planning, Building & Code Enforcement
Ara Michael Mihranian, AICP, Senior Planner

Preparation Assisted by
Smothers & Associates

TABLE OF CONTENTS

INTRODUCTION 1
- Purpose 2
- What is Neighborhood Compatibility? 2

POLICY ADMINISTRATION 3
- When Does it Apply? 3
- Project Review Process 5
- Process Chart 6
- Pre-application Process 7
- Time Limits 7
- Silhouette Construction 8
- Who Reviews Project Application? 9
- Public Notification 9
- Project Decision Process 10

CLASSIC ARCHITECTURAL STYLES 11

DESIGN TIPS 13
- Scale of Surrounding Residences 14
  - Mass and Scale 15
    - Architectural Features 16
    - Lot Coverage 18
    - Accessory Buildings 19
- Architectural Style and Materials 19
  - Facade Treatments 20
  - Height of Structures 21
  - Number of Stories 22
  - Roof Design 23
  - Open Space Between Structures 24
  - Apparent Bulk and Mass 24
  - Building Materials 25
- Setbacks 26
  - Off-Street Parking 27

CONCLUSION 28
GLOSSARY 29
REFERENCES 32
APPENDICES 33

NEIGHBORHOOD COMPATIBILITY HANDBOOK

INTRODUCTION

The City of Rancho Palos Verdes exists in a very special natural setting comprised of 12.3 square miles of land and 7.5 miles of coastline. With its magnificent views of the Los Angeles Basin and Pacific Ocean, relatively low density, rural and semi-rural character, significant open space, low crime and excellent schools, the City has become an increasingly desirable place to live. The construction of homes began in the 1920's prior to the City's incorporation and continued at varying rates to the present. The threat of massive and dense, multi-unit development along the City's coastline in the 1960's and early 1970's prompted a grass roots community effort to incorporate the fourth City on the Peninsula as a means to control planning and the implementation of policies. On September 7, 1973, the City of Rancho Palos Verdes incorporated.

Before its incorporation, many of the City's neighborhoods were developed with single-family residences under the jurisdiction of Los Angeles County. These houses, because of their size, floor plan and aging condition, have become the subject of significant modification in recent years. With increasing property values and more money being spent on homes today, much of the existing housing stock is not well-suited to meet the needs and accommodate the changing lifestyle of existing residents and those who are relocating to the City. However, when a change is made in an existing neighborhood, it is essential to properly balance residential development with the preservation of the rural and semi-rural character of the City. Modernization of the aging housing stock must be done in a manner that recognizes and respects the unique features and characteristics of neighborhoods, thereby ensuring continued enjoyment of the City's quality of life. This is the concept of Neighborhood Compatibility.

The City of Rancho Palos Verdes' General Plan contains policies on many aspects of residential development, including Neighborhood Compatibility. These policies have led to recommended guidelines for property development in the City. The City also encourages public input on proposed development plans as a means to preserve and enhance the character of established neighborhoods.

On November 7, 1989, the voters of the City of Rancho Palos Verdes approved the "Cooperative View Preservation and Restoration Ordinance" (Proposition M). The adopted Ordinance, among other things, "insures that the development of each parcel of land or additions to residences or structures occur in a manner which is harmonious and maintains neighborhood compatibility and the character of contiguous sub-community development." Although the Ordinance has been amended slightly over the years and its intent clarified through the adoption of the "Height Variation Guidelines," the basic elements of the Neighborhood Compatibility criteria have remained intact, but

have been expanded to include other residential development projects in addition to second stories. Therefore, the Neighborhood Compatibility requirement is administered on a case-by-case basis, recognizing the uniqueness of neighborhoods, sites and architecture.

On May 23, 2000, the Planning Commission initiated a project to prepare a Handbook that would acquaint the general public with the City's Neighborhood Compatibility requirement, and formed a Subcommittee to manage this task. Subsequently, the City Council created a Steering Committee to review and improve the City's Neighborhood Compatibility requirement. The Steering Committee consisted of two Council members, two Planning Commissioners, and five representatives from various homeowner's associations.

On May 6, 2003, the City Council reviewed and approved the content of this Handbook noting that the suggestions and guidelines contained herein are not intended to take precedence over the City of Rancho Palos Verdes Municipal Code (RPVMC), but rather to assist in the preparation and design of residential development projects.

Purpose

This Neighborhood Compatibility Handbook has been prepared for the benefit of residents who are proposing to build a new home, construct a room addition, or remodel their existing home. The handbook is intended to assist residents, architects, designers, and real estate professionals in understanding the City's procedure for processing residential development applications requiring the analysis of Neighborhood Compatibility, as set forth in the City's Development Code.

What is Neighborhood Compatibility?

Simply put, Neighborhood Compatibility is achieved when a new home or addition to an existing home is designed in a manner that blends in with the following characteristics of the immediate neighborhood:

- Scale of the surrounding residences
- Architectural styles and building materials
- Front, side, and rear yard setbacks

The "character" of a neighborhood is defined in the City's Development Code as follows:

- Architectural style, mass and bulk, height, number of stories, and roof design.
- Scale, orientation, setbacks, open space, architectural style, texture, color, and building materials.

Throughout the City of Rancho Palos Verdes, architectural styles tend to be expansive with horizontal gestures typically resembling California Ranch, Spanish Colonial, and Mediterranean architectural styles. These typical homes are generally constructed with

the use of natural materials, muted earth tones and simple roof forms. Many existing neighborhoods in Rancho Palos Verdes have a relaxed rural quality, consisting of residences that have been designed to capture and enhance views of the Pacific Ocean, Catalina Island, the Los Angeles Harbor, and the Los Angeles basin.

Therefore, a new home or addition must be designed in a manner that complements the surrounding neighborhood, with an emphasis on architectural style in order to preserve the unique characteristics and qualities of the City. This Handbook provides guidelines and suggestions, based on the aforementioned criteria, that may be incorporated into the design of a residential project.

POLICY ADMINISTRATION

In an attempt to preserve and improve the "character" of established neighborhoods when new homes or additions to existing homes are proposed, the City Council has adopted a method for regulating the size and appearance of single-family residential development projects through the Neighborhood Compatibility requirement, as defined in the City's Development Code.

When Does it Apply?

Pursuant to Section 17.02.030(B) of the RPVMC, an analysis of Neighborhood Compatibility shall be required for the following residential development projects:

1. A new residence that is proposed to be developed on a vacant lot;

2. A new residence that is proposed to replace an existing residence;

3. An existing residence that is proposed to be remodeled or renovated such that fifty percent or greater of any existing interior and exterior walls or existing square footage is demolished;

4. An addition to an existing single-family residence or the construction of any new detached structure that individually, or when combined with prior additions cumulatively, results in greater than: (i) 750 square feet of additional floor area, or (ii) a 25% expansion of the total square footage of all of the original structures constructed on the property, including the main residence, the garage, and all detached structures;

5. The construction of, or an addition to, a new second story or higher story; pursuant to Chapter 17.02 of the Development Code;

6. Projects that result in lot coverage that exceeds the maximum allowed in Chapter 17.02 of the Development Code;

7. The construction of, or an addition of a deck, balcony or roof deck to a second story or higher story if the total area of the deck, balcony, or roof deck is eighty (80) square feet or larger or projects more than six (6) feet from the existing building; and,

8. An addition of a mezzanine to an existing structure that modifies the exterior of the structure other than the placement of flush mounted doors and windows.

Exemptions

The projects listed in the following subparagraphs (a through d) shall be exempt from the Neighborhood Compatibility requirements of this Paragraph B. However, no property shall be issued a permit for a project that is subject to the same subparagraph more than once in a two-year period without complying with the Neighborhood Compatibility requirements:

a. An addition to an existing single-family residence that meets the following criteria:
   i. Is 16-feet or less in height, as measured according to the criteria stated in Section 17.02.040(B); and,
   ii. Is not being constructed along the facade facing any street,
   iii. Is 250 square feet or less in floor area; and,
   iv. Complies with all of the City's residential development standards.

b. An addition or conversion of non-habitable floor area to habitable floor area that does not result in exterior modifications other than the placement of flush mounted doors and windows.

c. The construction of a minor non-habitable accessory structure, such as, but not limited to, a cabana, a pool changing room, a storage shed, or a playhouses, that meet the following criteria:
   i. Is 12-feet or less in height, as measured from lowest adjacent grade as stated in Section 17.48.050(D); and,
   ii. Is less than 250 square feet in floor area; and,
   iii. Complies with all of the City's residential development standards.

d. The enclosure of a roofed breezeway between legally permitted structures or the enclosure of a 250 square foot or less patio cover, provided the enclosure:
   i. Is 16-feet or less in height, as measured according to the criteria stated in Section 17.02.040(B); and,
   ii. Is attached to the primary structure; and,
   iii. Complies with all of the City's residential development standards.

If the Neighborhood Compatibility requirement is triggered (see previous page), the analysis is based, at a minimum, on the review of the residences within the immediate neighborhood. For the purposes of Neighborhood Compatibility, the immediate neighborhood is normally considered to be at least the twenty (20) closest residences within the same zoning district. As previously noted, pursuant to Section 17.02.030(B)(2) of the RPVMC, the analysis of Neighborhood Compatibility is based on the following criteria:

A. Scale of surrounding residences
B. Architectural styles and building materials
C. Front, side, and rear yard setbacks

In addition to these criteria, comments and concerns raised by the public during the public noticing period will also be considered in the determination of Neighborhood Compatibility. It should be noted that the side and rear yard setback analysis is not expected to be as precise as the front yard setback analysis, but is intended to provide the decision makers with an idea of the current condition of the neighborhood.

Project Review Process

The Neighborhood Compatibility requirement is evaluated by the City in conjunction with the processing of a residential development application. The type of residential development application that needs to be submitted is determined by the nature of the proposed project. The Neighborhood Compatibility analysis is included in the required findings of fact for certain residential development applications. It is suggested that applicants contact a Planner at City Hall to determine the appropriate development application before going to the expense of having plans prepared. Furthermore, preliminary discussions with the City's Planning Staff often reveal potential conflicts that the proposed project may have with the Development Code.

The typical steps involved in development of a new residence or expansion of an existing residence in the City of Rancho Palos Verdes is depicted in the process chart on the following page. The chart is intended to assist a property owner/applicant in understanding the City's residential development review process. The steps represented in the chart may vary depending on the nature of a project and public comments. The steps specifically related to the Neighborhood Compatibility requirement are outlined in bold boxes on the chart.

SINGLE-FAMILY RESIDENTIAL DEVELOPMENT PROJECT PROCESS CHART

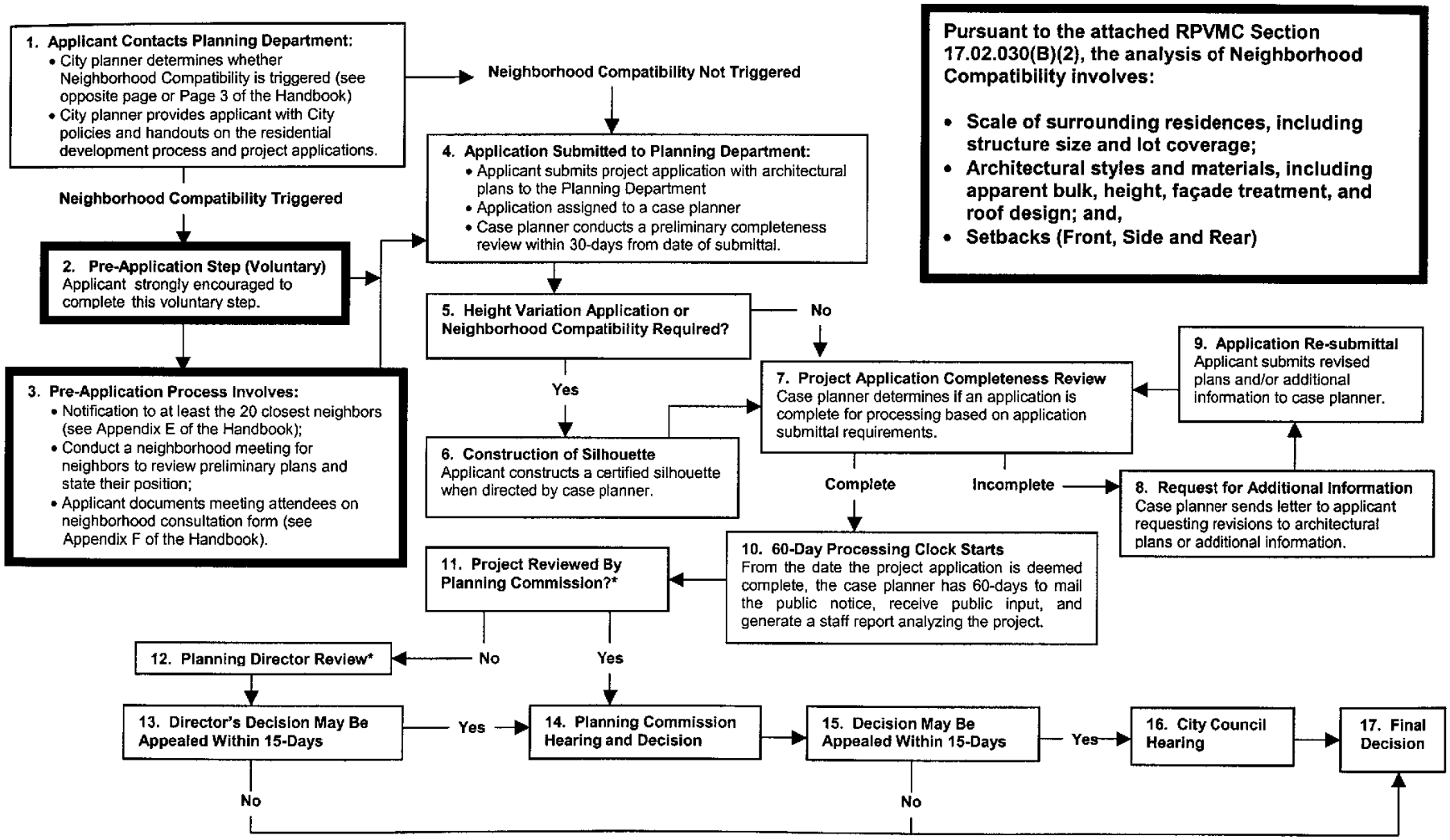

*The review process depends on the application requested. For more information see the flip side of this flow chart or Page 8 of the Neighborhood Compatibility Handbook, City Staff or the appropriate Code sections pertaining to the requested application.
The above boxes outlined in bold represent steps involved in the analysis of Neighborhood Compatibility

Pre-application Process

If a proposed project requires the Neighborhood Compatibility analysis, the City strongly encourages the property owner to complete a "Pre-Application Step." It should be noted that this is a **voluntary step** in the residential development process for the City of Rancho Palos Verdes that has been helpful in addressing neighborhood issues early in the process that may cause **delays in the formal process and added expense to the applicant**.

The Pre-Application Step involves three action items:

1. **Notification to at Least the 20 Closest Neighbors** – A project requiring Neighborhood Compatibility is normally analyzed based on at least the 20 closest homes within the same zoning district, which are also the homes most likely to be affected by the project (For information regarding the Neighborhood Compatibility findings please see Appendix A - RPVMC 17.02.030(B)(2).) Therefore, notification to the 20 closest properties is a Pre-Application step. However, since property owners within a 500-foot radius will receive a public notice by the City during the formal review process, it is strongly encouraged that notification also be given to potentially affected property owners within a 500 foot radius. The Pre-Application notice should indicate the date, time, and location of a neighborhood meeting (see Appendix E - Pre-Application Neighborhood Compatibility Meeting Notice).

2. **Conduct a Neighborhood Meeting to Review Preliminary Plans** – An applicant should conduct a meeting with the neighbors prior to formally submitting an application to the Planning Department. The neighborhood meeting is intended to provide the neighbors with an opportunity to review the preliminary plans and voice their concerns. It is suggested that the meeting occur in the early evening, over the weekend or at a time when most neighbors are available.

3. **Applicant Documents Meeting Attendance** – In order to complete the Pre-Application Step an applicant is encouraged to obtain verification that the 20 closest neighbors have reviewed the preliminary plans. Said verification may be achieved by completing the attached sample form (see Appendix F - Neighborhood Compatibility Pre-Application Consultation Form).

Time Limits

Upon the submittal of a project application to the Planning Department, a case planner will be assigned to the project based on workload and level of experience. Within three to four working days from the date of submittal, the property owner/applicant will receive a letter from the City informing them of the case planner assigned to the project. The case planner will be responsible for processing the project application.

Pursuant to the California Permit Streamlining Act, a residential development application submitted to the Planning Department must be reviewed for completeness within 30 calendar days from the date of submittal. The "completeness review" involves a comprehensive review of the project applications and architectural plans for completeness and accuracy. Within the 30-day "completeness review" period, if the project applications or architectural plans are missing information needed to process the property owner's request, the case planner will deem the project "incomplete."

If an application is deemed "incomplete," a letter will be sent to the property owner/applicant within the 30-day review period identifying the information that is needed in order to deem the project application complete for processing. At this time, the case planner will also notify the property owner of any "concerns" observed during the initial review of the proposed project. It should be noted that additional Staff concerns may arise after a project has been publicly noticed and public input is obtained. If an application is deemed "incomplete," it is the responsibility of the property owner/applicant to resubmit the appropriate information needed to continue processing the application. The submittal of additional or new information triggers a new 30-day "completeness review" period.

Once an application is deemed "complete" by the case planner, a 60-day processing clock begins. During the 60-day processing period, a public notice is sent to property owners within a 500-foot radius, interested parties, and published in a local newspaper for general circulation at least 15 days before a decision is rendered, or at least 30 days before a decision is rendered for a Height Variation application. It is during the public noticing period that the City receives public comments or concerns. Once the public comment period has ended, the case planner will generate a Staff Report that analyzes the project and public input for review by the Director of Planning, Building and Code Enforcement or the Planning Commission. A decision on the project must be made within the 60-day processing period.

For a detailed explanation of the typical steps involved in the City's residential development process, please refer to the Process Chart on Page 6, as well as a written description that corresponds to the steps identified in the Process Chart that is available in Appendix C.

Notwithstanding the steps depicted in the Process Chart, there are other factors that affect the length of time it takes to process a development application that involves the Neighborhood Compatibility analysis. These factors include, but are not limited to, neighbor concerns, Staff concerns, Planning Commission direction to redesign, and appeals. Thus, it typically takes three to six months to process a residential development application involving Neighborhood Compatibility.

Silhouette Construction

If the Neighborhood Compatibility analysis is required, the property owner/applicant will be required to construct a certified silhouette that depicts the proposed project before an

application is deemed complete for processing. In order to minimize costs involved in constructing a silhouette, it is advised that the silhouette not be constructed until directed to do so by the case planner, because it is likely that a project will undergo revisions before being deemed complete for processing. For more information regarding the City's criteria for constructing a silhouette see Appendix G.

Who Reviews Project Application?

Analysis of the City's Neighborhood Compatibility requirement shall be made by either the Director of Planning, Building, and Code Enforcement or the Planning Commission, depending upon the review process of the requested development application. Notwithstanding, the Director of Planning, Building and Code Enforcement shall refer a development application directly to the Planning Commission for consideration, as part of a public hearing, if any of the following are proposed:

1. Any portion of a structure that exceeds sixteen (16) feet in height and extends closer than twenty-five (25) feet from the front or street-side property line; or,

2. The area of the structure that exceeds sixteen (16) feet in height (the second story footprint) and exceeds seventy-five percent (75%) of the existing first story footprint area (residence and attached garage); or,

3. Sixty percent (60%) or more of an existing garage footprint that is covered by a structure that exceeds sixteen (16) feet in height (a second story); or,

4. Based on an initial site visit, the Director determines that any portion of a structure that is proposed to exceed sixteen (16) feet in height may significantly impair a view as defined in Section of the RPVMC 17.02.040; or,

5. The portion of the structure which exceeds sixteen (16) feet in height is being developed as part of a new single-family residence; or,

6. Grading involving more than 1,000 cubic yards of combined cut and fill.

Public Notification

Regardless of whether a development application requiring the Neighborhood Compatibility analysis is considered by the Director of Planning, Building, and Code Enforcement or by the Planning Commission, a public notice is required to be published in a newspaper of general circulation and given to: a) all owners of property within a 500-foot radius from the subject property, b) all persons requesting notice, c) any affected homeowner associations, d) interested parties, and e) the applicant pursuant to Section 17.80.090 of the RPVMC. Furthermore, pursuant to Section 17.02.030(B)(4) of the RPVMC, a public notice shall be given at least 15 days prior to

rendering a decision, unless a Height Variation application is requested, which requires a public noticing period of at least 30 days.

Project Decision Process

When a project involves the Neighborhood Compatibility requirement as part of a discretionary development application that does not require a public hearing before the Planning Commission, the project application(s) will be reviewed and decided upon by the Director of Planning, Building and Code Enforcement. The Director's decision is based on a report generated by the Planning Staff analyzing the proposed project. The Staff Report includes a recommendation for consideration by the Director.

When a project involves the review of a discretionary development application by the Planning Commission through a public hearing, the Planning Staff will schedule a duly noticed public hearing before the Planning Commission. Prior to the public hearing, Staff will analyze the proposed project and generate a Staff Report for consideration by the Planning Commission. A copy of the Staff Report, as well as an agenda informing the property owner of the meeting date and time, will be made available on the Friday before the scheduled Tuesday Planning Commission meeting, unless otherwise noted. **The Planning Commission routinely meets on the 2nd and 4th Tuesday of each month at the Hesse Park Community Building, 29301 Hawthorne Boulevard, Rancho Palos Verdes, unless otherwise noted.**

It is highly recommended that the property owner and project architect attend the public hearing for the proposed project. At the public hearing, the applicant will have an opportunity to introduce the project along with any related exhibits, for consideration by the Planning Commission. Furthermore, this is the applicant's opportunity to address the Planning Department's project recommendation, as well as address any other concerns expressed during the public noticing period. It should be noted that as part of the public notice, members of the community are invited to submit written comments or provide public testimony at the public hearing regarding the merits of the project. After considering all public testimony, as well as the relevant facts related to the proposed project, the Planning Commission will discuss the merits of the project and render a decision.

A project, whether reviewed by the Planning Director or the Planning Commission, will either be approved, denied, or conditionally approved. Projects reviewed by the Planning Commission may be "continued" (rescheduled) to a specific future meeting to allow additional time to address outstanding issues. After a decision is rendered, any interested party, including the project applicant, may appeal the decision, provided that a written request stating the grounds of the appeal and the appropriate filing fee are submitted to the City within the required 15-day appeal period. A decision made by the Director of Planning, Building and Code Enforcement may be appealed to the Planning Commission. A decision by the Planning Commission, including a Director level appeal, may then be appealed to the City Council.

CLASSIC ARCHITECTURAL STYLES[1]

This section describes architectural styles of residences commonly found in California, including the City of Rancho Palos Verdes. A summary of the basic physical components of these different architectural styles are provided herein and are intended to assist a property owner/applicant in designing a new residence or an addition to an existing residence in a manner that is true to the architectural style and its relationship to the characteristics of the immediate neighborhood.

It should be noted that the architectural styles depicted herein do not necessarily exclude or limit the development of other architectural styles. However, proposed architectural styles that are not referenced herein will be reviewed more stringently with respect to the City's Neighborhood Compatibility requirement and its relationship to the characteristics of the immediate neighborhood.

Spanish Colonial

- One- and two-story structures
- Low-pitched gable roof with little or no overhang
- Red tile roof
- Flat roof with red tile parapet cap or Stucco siding
- Arched window and porch openings (semicircular, elliptical, or segmental)
- Heavy wooden doors
- Large focal window on front facade.
- Wing walls at one corner
- Indoor/outdoor courtyards, patios, and terraces
- Wrought iron balconies, railings and window treatments
- White or earth-tone stucco or smooth plastered walls

Spanish Colonial

Mediterranean/Italian Renaissance

- Low-pitched hipped roof (flat in some instances)
- Roof typically covered with ceramic tiles
- Wide eaves supported by decorative brackets
- Upper-story windows smaller and less elaborate than first floor windows
- First-story windows, doors or porches commonly with arches above them
- Windows placed symmetrically on either side of the centered entrance.
- Entrance area usually accented by small classical columns or pilasters
- Facade commonly symmetrical
- Smooth stone or earth-tone / white stucco facade

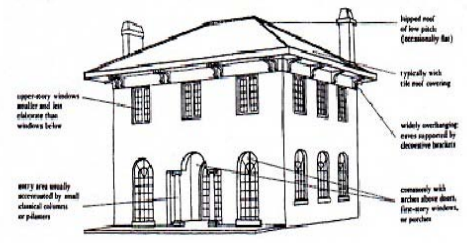

Mediterranean / Italian Renaissance

[1] Taken from A Field Guide to American Houses, 1995, by Virginia & Lee McAlester

Mission

- Low-pitched hipped or gabled roof
- Red tile roof
- Wide overhang eaves with exposed rafters
- Curved (Mission) shaped dormer or roof parapet
- Smooth whitewashed stucco surfaces and walls
- Symmetrical or asymmetrical facades
- Arcade entry porch with arched entrance are part of one smooth plane
- Open porches supported by square or rectangular piers
- Quatrefoil windows
- Symmetrically placed windows
- Second-story balconies with wood railing

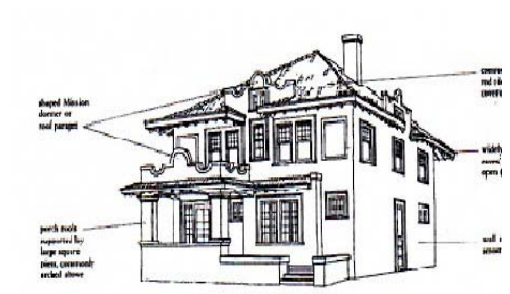

Mission

Monterey

- Two-story structure
- Low-pitched gabled roof or hipped roof with expansive overhang
- Tile or shingle roof material
- Second-story balcony along front facade
- Balcony cantilevered from facade with wood railing and covered by principal roof
- White/earth-tone stucco finish occasionally with wood siding accents
- Single wood door entrance
- Multi-paned windows
- Wood shutter accents
- Pronounced chimneys

Monterey

Craftsman

- Low-pitched gable roof with wide unenclosed eave overhangs
- Multiple roof planes
- Decorative beams or braces under gable
- Exposed roof rafters with elaborate and curved ends
- Full- or partial-width roofed porches supported by square or battered columns
- Rubble stone faux foundation
- Rubble stone chimneys
- Use of natural materials such as redwood, tile, and stone.
- Window dormers with gable or shed roof
- Wood casement windows
- Exposed wooden balconies
- Trellis porch or porte-cochere

Craftsman

California Ranch (Contemporary)

- One-story structure
- Asymmetrical rambling floor plan with easy outdoor access
- Low-pitched gable or shake roof with large overhang and exposed rafters
- Clay tile roof material
- Stucco walls with wood siding and masonry (brick or stone) accents
- Decorative iron or wooden porch supports and shutter accents
- Attached garage integrated into the design
- Direct or indirect driveways
- Use of picture windows or bay windows
- Private outdoor patios or courtyards
- Low and wide brick or stucco chimneys

California Ranch

Split-Level

- One- and one-half story (bi-level) with 8-foot step between lower and upper levels
- Structure steps with natural topography (upslope or downslope from street, or parallel to street)
- Low-pitched gable or hip roof
- Varying roof planes
- Clay tile roof material
- Stucco walls with wood siding and masonry (brick or stone) accents
- Attached garage integrated into the design
- Entrance at ground level between upper and Lower levels.
- Decorative iron or wooden porch supports
- Use of picture windows, bay windows, and clerestory

Split-Level

DESIGN TIPS

This section presents design tips for residential development projects that require the Neighborhood Compatibility analysis. The criteria for making the Neighborhood Compatibility finding, as outlined below, is used in the organization of this section.

- Scale of Surrounding Residences
- Architectural Styles and Materials
- Front, Side and Rear Yard Setbacks

In addition to the design tips, this section also offers suggestions in terms of architectural styles discussed in the previous section, that may be integrated into the

planning of a structure to better achieve its compatibility with the character of a neighborhood. These tips and suggestions are not mandated, but rather are intended to assist in the design of a project that is compatible with the characteristics of the immediate neighborhood.

Some of the suggested design tips stated in this section are intended for new residences, while others are intended for room additions and remodels to existing residences. **These design tips put a great deal of emphasis on understanding the characteristics of a neighborhood**. Although an applicant may already have a good feel of their neighborhood's character, it may be helpful after reviewing this Handbook, to walk around your neighborhood to document (notebook entries and photographs) prevalent design features and architectural styles that you may want to consider incorporating into the design of your project. It is also useful to take photographs of your house with the neighbor(s) house in the shot to better understand the relationship between the structures. **This is the time to start considering how the design of your project may impact your neighbors.** It is suggested that you contact the City's Planning Department Staff with any inquiries you may have.

I. SCALE OF SURROUNDING RESIDENCES

The criteria presented in this section is intended to address the scale of a project in the context of the immediate neighborhood. The following tips are intended to ensure that new construction is designed in a manner that is relatively proportional to the existing residence, as well as neighboring residences, resulting in a harmonious relationship between the scale of the proposed project and the scale of the existing neighborhood.

Neighborhoods that were recently constructed generally have common features, such as similar lot sizes and setbacks. If a home is part of a residential tract, there may be common floor plans, architectural styles and details. Furthermore, the streetscape will often be very similar throughout a neighborhood. In neighborhoods where homes have been constructed over a longer period of time and are not part of a residential tract, the common architectural style and design features may be less obvious at first because most of the homes in the neighborhood may have been custom built. Nonetheless, further study of the neighborhood may reveal a common architectural style and design elements that are characteristic of the neighborhood, such as structure scale, building proportions, height, building materials, and structure setbacks. A rhythm in the streetscape may also become more evident, while building materials may be more diverse and rather generously applied to a structure, adding a refined appearance to the neighborhood. Integrating specific architectural features into the design of a project may result in a structure that enhances an architectural style commonly found in the neighborhood.

In Rancho Palos Verdes, the prevalence of low profile home designs creates a casual and informal quality to a neighborhood. A project that consists of a two-story residence or a second-story addition with a strong vertical emphasis and a more formal style, will

cause a neighborhood to start losing its original character and setting. Therefore, it is the City's intent to ensure that new homes and major additions be designed compatibly with the existing structures of a neighborhood.

A. MASS AND SCALE

A new or modified structure should be designed so that it is similar to the neighboring structures: it should not appear overwhelming or disproportionate in size or scale. The following illustrations represent a structure's relationship to neighboring properties in terms of mass and scale:

A neighborhood with proportionate characteristics

Drastically out of scale with the neighborhood

A good attempt to reduce mass and scale with the use of design details

A good attempt to reduce mass and scale with the use of design details.

Too massive of a design that is incompatible with the character of the neighborhood.

A good design to reduce mass and scale by preserving the appearance and character of the neighborhood.

1. Architectural Features

A new residence or addition that is proposed to be larger than the surrounding residences may be designed in a manner that incorporates architectural features that reduce its apparent mass and scale.

a. Plate Height

A suggested architectural feature that can be used in reducing the apparent mass and scale of a structure is to lower the plate height of a single-story or two-story structure so that the eave height is lowered, as illustrated below:

Design Tip: A hip roof can reduce the apparent mass of a structure.

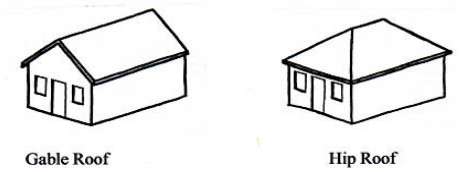

The mass of this house is reduced by lowering the plate height, using dormers and including an entry element.

b. Entrance

The front door entrance should be designed to be proportional to the size of the residence, and not dominate the visual appearance of a structure. This suggestion does not mean that a two-story entrance is prohibited. However, it is important to minimize the use of strong vertical features that create a formal style that dominates the appearance of the structure, as well as the neighborhood.

The house on the left has an entry with human scale, the one on the right does not.

c. Eaves

Adjusting the height of an eave may be used to lower the mass and scale of a structure by lowering the building plate. This design suggestions can be enhanced by increasing the eave overhang of the roof.

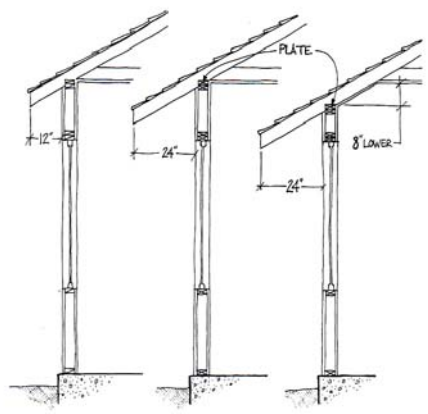

Examples of varying eave heights

2. Two Story

A proposed project consisting of a second story in a neighborhood that is mostly comprised of single-story structures will be reviewed closely to determine its compatibility with the neighborhood's character. Therefore, when designing a residence or addition that has a second story, it is suggested that the design include a single story element and a horizontal orientation on the visually prominent portions of the structure, particularly the street facing elevation.

A two-story residence that maintains a single story roofline common to the immediate neighborhood

a. Balconies and Decks

For projects with a second or higher story, it is highly recommended that balconies and small decks be incorporated into the project's design to reduce the apparent mass and scale of a structure. For further information regarding the City's requirements regarding "roof decks" see Section 17.20.030(D) of the RPVMC.

Design Tip: A second story addition should occur towards the rear and side of the original structure's front facade.

Design Tip: A second story addition should not be located entirely over a garage to avoid the "pop-up" appearance.

Design Tip: A second story should be designed with varying roof planes that are integrated with the lower roof planes.

3. Garage

The location and size of a garage should not dominate the street view of a residence. Furthermore, a garage and its driveway (direct or indirect) should be sited based on the pattern of the neighborhood.

Design Tip: When a residence has more than three bedrooms, there may be a practical need for added garage space.

Design Tip: Energy Conservation

- Use large roof overhangs.
- Plant deciduous trees on south and west elevations.
- Use windows for maximum natural light.
- Use windows to create through airflow for natural ventilation.
- Ventilate attic spaces.
- Use porches, covered patios and the like to buffer the residence from heat gain.

4. Streetscape Patterns

In an established neighborhood, the streetscape should be preserved, especially if it is commonly seen throughout the area.

5. Neighbors' Views

In accordance with Section 17.02.040 of the RPVMC, views from the viewing area of neighboring residences are protected by the City when structures exceed the 16-foot "by right" height limit. As such, in cases where a Height Variation application is required for a proposed project that exceeds the 16-foot "by-right" height limit, views from a neighboring residence should be preserved by carefully positioning a new structure or addition, and by limiting the project's width, depth, and height. Although views that may be blocked by a structure below 16-feet are not protected, residents are encouraged, but not required, to take their neighbor's views into account when designing a project below 16-feet in height.

6. Grading

Excessive grading used to create a building pad should be avoided. Rather, grading should be designed to respect the natural terrain with minimal site disturbance. Proposed grading that will raise the existing lot elevation is discouraged.

Natural features such as the natural slope of the land, significant trees and their root systems, existing vegetation, and any other natural site attributes should be preserved and taken advantage of in the design of a project.

B. LOT COVERAGE

Lot coverage is primarily intended to regulate the relationship between lot size and building footprint. A structure should be designed in a manner that does not appear too big for the lot. A project that maximizes the lot coverage requirement, but is within the Code limit, is discouraged.

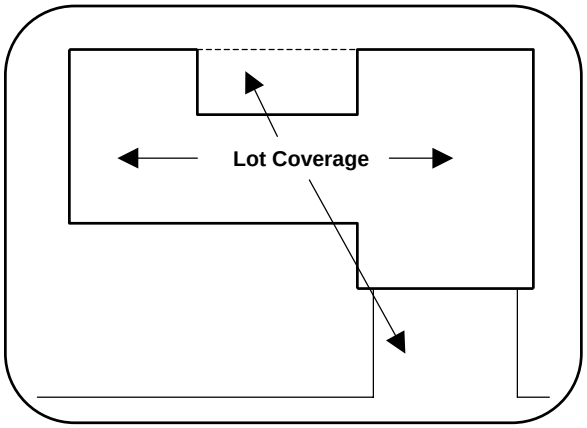

The City's lot coverage requirement is based on zoning districts, as defined in Section 17.020.040(A) of the RPVMC. The Development Code defines lot coverage as that portion of a lot that is occupied by any building or structure, interior courtyards, trellises, decks over thirty inches in height, and parking and driveway areas (including private streets). For information regarding your zoning district's lot coverage maximum see Appendix B.

C. ACCESSORY BUILDINGS

Detached accessory structures can be found throughout the City and are typically in the form of a garage, guest house, pool cabana, or storage shed. When designing a detached accessory structure, in addition to considering the limitations established by the Development Code, such as height, setbacks, and size, the structure should maintain the visual appearance and architectural style of the main residence.

Design Tip: When the plans for a project get close to its lot coverage limit, alternatives should be considered, such as decomposed granite or grass strips.

A detached accessory structure used as a garage should also maintain the architectural detail of the main residence. It is suggested that windows be included on the garage door to reduce the apparent mass of the structure. It should be noted that a detached garage situated towards the rear of the property will require extending the length of the driveway, which will be counted towards the maximum lot coverage calculation established by the zoning district.

A detached accessory structure should not be located in the front of the main residence since it will increase the perceived mass of the principal structure.

Rules of composition:

The ideal rectilinear shape has sides in a ratio of 1:1.6 or 3x5.

Order is the greatest and most general of aesthetic laws

The Law of the Same – Architectural harmony may be perceived or created in a structure or composition of structures that attains order through the repetition of the same elements, forms, or spaces. Unity or harmony in uniformity.

The Law of the Similar – Architectural harmony may be perceived or created in a composition that attains order through the repetition of similar elements, forms or spaces. Unity in variety.

(These two laws apply as well to materials, colors, textures and symbols.)

II. ARCHITECTURAL STYLES AND MATERIALS

In accordance with the criteria used in the analysis of the Neighborhood Compatibility requirement, this section is intended to provide design tips that pertain to architectural style and materials. Pursuant to Section 17.02.040(A)(13) of the RPVMC, "style" refers to design elements, which consist of, but are not limited to, facade treatment, height of structure, open space between structures, roof design, apparent bulk or mass of the structure, and number of stories.

The City of Rancho Palos Verdes consists of single-family residences that vary in architectural styles. The majority of the homes in the City were built between the 1960's and 1970's and tend to be contemporary renditions of

California Ranch, Spanish Colonial and Mediterranean/Italian styles. However, the new homes and remodels being constructed today are typically deigned to be Mediterranean. These structures tend to be of a low-profile asymmetrical design with horizontal elements that emphasize the human scale. Other common architectural elements being constructed today include broad roof overhangs, shallow roof pitches, well-defined entries, and wide eaves. These elements are designed to give many homes a rural quality.

The following tips are intended to ensure that the structures being constructed today are designed in a manner that preserves the character of an existing neighborhood by utilizing architectural styles and building materials that are modern, yet true to the original spirit of the neighborhood.

A. FACADE TREATMENTS

The design of a facade is critical to a structure's visual appearance, specifically as viewed from the street. A facade oriented towards the street should provide visual interest and a sense of human scale. While the details of various architectural styles may differ, these elements create an interesting streetscape and enhance the character of the neighborhood, as well as the City. The following suggestions are intended to assist in the design of a facade as it relates to the character of neighboring homes:

1. A facade should be designed in a manner that appears similar in scale and character to those in the immediate neighborhood.

2. The doors and windows of a structure should be proportional, as well as relate to the scale and architectural style of the building.

3. The use of architectural details are encouraged, but should be true to the structure's and the neighborhood's original architectural style.

4. The use of decorative molding, windows, bay windows, dormers, shutters, chimneys, masonry, balconies, wrought iron railings, and/or latticework are encouraged.

5. The scale of architectural details (porches, roof overhangs, bay windows, chimneys, etc.) should be appropriate to the size and proportion of the building.

6. A structure's facade should be designed in a manner that provides visual interest to the street, but is not visually cluttered.

7. The placement of windows on a second story should not compromise the privacy of a neighbor.

Design Tip: Overuse of architectural details can result in a cluttered, disorganized or gaudy appearance.

Design Tip: Provided that neighboring views are not impacted, established or newly planted landscaping can be used to enhance and soften a massive or stark facade.

8. Window materials should be consistent with the original materials.

9. An addition to an existing residence should appear as if it were part of the original structure by incorporating design details that are true to the architectural style represented in the existing structure.

10. The use of a blank facade that faces a street should be avoided.

Design Tip: The privacy of your neighbor should be preserved by carefully locating and sizing windows and decks/balconies.

B. HEIGHT OF STRUCTURES

The height of a structure should be compatible with the size of a lot, as well as the context of the surrounding neighborhood. The City of Rancho Palos Verdes, by the vote of the citizens on November 7, 1989, adopted procedures and decision criteria for evaluating the height of new residences and additions to existing residences that exceed the established height limits. Pursuant to Section 17.02.030(B) of the RPVMC, the established height limit is based on the type of lot (upslope, downslope, pad, or other). As part of the adopted procedures, a Height Variation Permit process was created to consider the construction of a structure that exceeds the City's maximum "by-right" height limit of 16-feet. For information regarding lot types and maximum heights, see the City's Planning Department. The following tips should be considered when designing the height of a structure:

1. The height of a structure should be compatible with the established building heights in the neighborhood.

2. The height of a structure should be proportionate to the front yard setback.

3. The second story of a structure should be setback from the first story.

4. The height of a structure on a sloping lot should respect the natural topography.

5. The height of a structure should be carefully designed to respect views, as defined in Section 17.02.040 of the RPVMC, from the viewing area of neighboring properties. Although views that may be blocked by a structure below 16-feet are not protected, residents are still encouraged, but not required, to take their neighbor's views into account when designing a project below 16-feet in height.

Design Tip: The privacy of a neighbor can be preserved by placing windows high on a wall to provide light and ventilation, but avoid views onto an adjacent property.

6. On visually prominent sites (promontories, ridgelines, hilltops, etc.) the height of a structure should be kept to a minimum, avoiding the use of multistory, boxy home styles.

7. The height of a structure should not result in a significant loss or infringement of privacy on a neighboring property.

C. NUMBER OF STORIES

The number of stories proposed for a structure is directly related to its height. Therefore, when designing a structure, consideration must be given to the natural topography of a project site, as well as the height and number of stories of the surrounding homes. The following suggestions are intended to assist in the design of a multiple story structure:

An example of using roof volume for a second level

1. On natural sloping lots, the number of stories proposed should be based on the natural terrain as much as possible, so as to minimize grading.

2. The design of a hillside structure, proposed to have multiple stories, should give special attention to the visual impacts from canyons and open space areas.

3. If a second floor is being contemplated, consider utilizing the roof volume for the placement of dormers.

A second floor setback from the first floor.

Completely out of character with the surrounding homes

Good effort to bring front elevation into scale with the neighboring homes.

Not a good attempt to make this home fit in with the neighbors. This type of design is discouraged.

Some effort made to soften the scale and mass by use of architectural design elements.

4. A second story addition should be designed so that it steps back from the first floor, articulating the lower and upper levels.

5. When a two-story house is being contemplated in a neighborhood comprised of one-story structures, careful attention should be given to the scale and mass of the proposed structure so that it appears similar to the surrounding structures.

D. ROOF DESIGN

The design and character of a structure is greatly influenced by the form and dimensions of its roof. A new roof should appear similar to the roofs typically seen throughout the neighborhood, both in terms of style and pitch. The following tips are suggestions that can be used in designing a roof, as well as selecting its material:

1. The design of a roof for new structures should be compatible with the pitch, character, and materials of roofs found in the neighborhood.

2. The roof of an addition should be integrated into the existing roof at a similar pitch.

3. Avoid designs that consist of large unbroken roof surfaces, especially those that run parallel to the street.

4. The use of flat or large and steep roofs should be avoided.

5. A design that consists of multiple roof planes can reduce the apparent mass of a structure, but should not dominate the style of a structure.

This house is a good example of multiple roof planes with cascading rooflines.

6. Roof materials should be true to the architectural style of the original structure.

7. Skylights are encouraged but should be consistent with the architectural style of the structure, and should never exceed the height of the highest roof ridgeline. A skylight may be integrated into a roof by using flat glass that is similar in color to the roof material.

8. Skylights, vents, and other roof top fixtures should be located on the back side of a roof, away from public view.

9. Dormers should be placed in balance with the first floor windows and consistent with the architectural style of the structure.

Design Tip: A roofline should be highest over the most important portion of a structure and then cascade to lower rooflines over peripheral portions of the structure.

E. OPEN SPACE BETWEEN STRUCTURES

The open space around a structure, achieved by the required setbacks, allows for sunlight and air, provides privacy, as well as enhances the character of a neighborhood. The following design tips can be used in the placement of a new structure or addition on a lot, specifically as it relates to open space:

1. A structure should be designed to resemble the scale of the project site by providing adequate open space around the structure.

2. The location of detached accessory structures should not limit the usability of the outdoor area surrounding the primary residence.

3. The distance between the primary residence and a detached accessory structure should meet the requirements set forth in the Uniform Building Code (see Building and Safety for more information regarding setback distances).

4. The design of a residence should consider using portions of the structure to define and incorporate usable outdoor spaces, such as courtyards, patios, breezeways, porches, decks, and terraces.

5. A residence should have sufficient space for its exterior functions, like driveway and entry approaches, parking, service areas, courtyards, patios, or garden areas.

6. The outdoor space surrounding a structure should relate to the character, mass and function of the structure.

Design Tip: Dormers lower the plate and eave lines. The use of dormers as second story windows can break up large roof surface areas.

F. APPARENT BULK AND MASS

The bulk and mass of a structure is assessed in terms of floor area, height, relationship to lot size, and architectural style. The apparent bulk and mass of a structure should be designed in a manner that is proportional to adjoining properties and enhances the rhythm of the streetscape. This can be achieved by incorporating the following design suggestions:

1. The bulk and mass of a new residence or an addition to an existing residence should be similar to neighboring structures, not overwhelming or disproportionate in size. A design that is out of character with the neighborhood is strongly discouraged.

2. A room addition should be integrated into the existing structure so that the new living space physically flows and visually connects to the existing structure.

G. BUILDING MATERIALS

The exterior presentation of a structure, in terms of color, texture, and use of materials in the form of architectural details, greatly influences curb appeal, as well as compatibility with neighboring structures. The design of a new structure or an addition to an existing structure should maintain the prevailing texture of building materials within a neighborhood so that there is a unifying link between existing and new structures. The building materials selected in a design should be used to reinforce the character of the neighborhood, while blending with the natural setting. Although the selection of building materials is a personal decision, the following suggestions are intended to facilitate the selection process:

1. In developing a design concept, consider the materials and colors used in other buildings in the surrounding neighborhood.

2. Exterior materials should be compatible with those that are common to the neighborhood.

3. The use of natural materials on exterior facades is preferred, such as wood, stone, brick, slate, and fire retardant shake shingles.

4. Limit the number of different exterior materials so as to avoid a too “busy” look.

5. An addition to an existing structure should use the same materials as the original structure to unify the new with the old.

6. Although the selection of exterior color is a personal decision, the colors should consist of earth tones that complement the structure and the streetscape.

7. Material combinations should be applied to all elevations. Facades that are blank and lack detail are discouraged.

Color Design Tip:

- Avoid white on white colors as it creates no contrast.
- Create contrast in the choice of colors.
- Limit exterior colors to three with a contrasting accent.
- Use subdued and light colors on large surfaces or volumes.
- Use earth-tone colors on hillside structures to blend in with the natural terrain.

Roof Color Design Tip:

- Natural colors of wood, barrel tile or slate are preferred.
- Earth tone and muted colors are preferred.
- Avoid glossy surfaces

8. When using a combination of materials such as stone and siding, never end it at an outside corner. Wrap it around the corner onto the next segment of the building facade. Inside corners are acceptable locations to terminate an exterior material.

9. Chimneys should be consistent with the architectural style of the structure by incorporating the same or complementing materials as the structure.

III. SETBACKS

The purpose of a setback is to provide a harmonious strip of open space for light and air between a structure and the abutting property lines, which in most cases also includes the street property line. According to the City's Development Code, the minimum requirements for the front, side, and rear yard setbacks is based on the designated zoning district, as well as the year the lot was created. For more information see Appendix B and the City's Planning Department. Nonetheless, in most cases, lots on a given block will have the same minimum setback requirement. However, variations of the required setbacks are not uncommon, especially the front yard setback, which in some neighborhoods may be greater than the minimum requirement. The variation in setbacks may exist because older homes may have been built under different standards than what the City now requires. However, when applying the Neighborhood Compatibility requirement, the proposed front, side, and rear yards setbacks will be compared to the respective setbacks of the immediate neighborhood.

A setback that is less than the required minimum setback will require a Variance approval from the City's Planning Commission. A Variance is usually warranted whenever there is a physical characteristic about a property that creates a hardship for development that other similar properties do not have to bear. It is suggested that you contact the City's Planning Department for further information regarding these matters.

This criteria for Neighborhood Compatibility is intended to allow the City a mechanism to ensure that the distances between the front, side, and rear property lines and a proposed project are consistent with the general characteristics of the surrounding neighborhood. The following tips are intended to assist in the placement of a structure as it relates to front, side, and rear yard setbacks:

- A new structure should be located at or near the established front, side, and rear yard setbacks for the surrounding neighborhood, even if it is greater than the minimum requirement. At no time should the setbacks be less than the minimum distance required by the designated zoning district, unless a Variance is warranted.

- A new structure or an addition to an existing structure should be designed in a manner that does not dominate the side and rear yards of a lot, as well as respects the side and rear yards setbacks of the neighboring properties.

- Establish a building setback from the property line that respects the natural terrain, particularly mature trees, rock outcroppings, and topographic features.

- The defined front yard should visually blend with adjacent properties with the use of landscaping. No more than 50% of the front yard area should contain hardscape as stated in Section 17.48.030(D) of the RPVMC.

- The use of front yard fences or walls is discouraged as it deters from the visual appearance of a structure, specifically from the street. However, if proposed, Section 17.76.030(C)(1) of the RPVMC limits the height of fencing and/or walls located between the street property line and the closest building facade to the street to 42-inches in height. Fences and/or walls proposed to be higher than the 42-inch limit will require review of a discretionary application, such as a Variance or Minor Exception Permit. See the City's Planning Department for more information.

- Pursuant to Section 17.76.030 of the RPVMC, fences and/or walls located along the side and rear property lines may require a Fence, Wall and Hedge permit. The placement of a fence along the side or rear property line should respect views from neighboring properties.

- As a structure's setback is increased, its apparent mass will decrease.

- Variations of the front yard setback for portions of a building facade can serve to reduce the apparent mass of a structure.

- A second-story facade should be setback farther than the first-floor facade in an effort to reduce the apparent mass of the structure.

This house has both a varied front setback and the second story has been setback farther than the first floor wall.

A. OFF-STREET PARKING

According to Section 17.02.030(E) of the City's Development Code, a minimum of a two car garage is required for all new residences and major additions (50% or more

expansion, renovation or demolition of an existing residence). The following tips are intended to guide the design of a residence as it pertains to parking and driveways.

1. The driveway or parking area should be proportional to the overall front yard area, and should be placed directly in front of the garage area.

2. A driveway must maintain a minimum width of ten feet.

3. The use of an indirect or direct driveway should be based on the driveways commonly found in the immediate neighborhood.

4. Avoid large expanses of paved surfaces, especially driveways on an up-slope lot from the street, that are more visually prominent.

5. An extended driveway on a sloping lot should camouflage exterior driveway lighting so as to avoid a "runway" appearance at night.

6. Pursuant to Section 17.76.040(E) of the RPVMC, a driveway should never exceed a gradient of 20%.

7. A driveway which averages a slope of 10% or more and is 50-feet of more in length shall maintain a 25-foot turning radius between the street of access and the garage or parking area.

8. Interlocking pavers (turf blocks), grasscrete, grass strips, or decomposed granite may be used for added outdoor parking yet have the visual quality of turf. However, such paving may be considered lot coverage if used for a parking or driveway area.

Design Tip: The visual appearance of a driveway can be improved by using textured surface treatments, mixed paving materials, earth-tone colored materials and/or surface scoring patterns.

CONCLUSION

The information you have just reviewed is provided by the City of Rancho Palos Verdes to better inform the general public of the City's Neighborhood Compatibility requirements and procedures. The design tips and guidelines provided in this Handbook are suggestions: the final decision on a project will be based on an analysis prepared for the specific project and on public input.

To obtain the appropriate project applications and Development Code requirements, it is highly recommended that you contact the City's Planning Department before going to the expense of preparing architectural plans.

The City's Planning Department may be contacted by calling (310)544-5228. The City's website, which contains the Municipal Code as well as other information regarding the residential development process, is www.palosverdes.com/rpv.

GLOSSARY

The following is a collection of terms commonly associated with this topic, as well as architectural and planning terms that are generally associated with residential design.

Accessory Structure – A structure or part of a structure not exceeding twelve feet in height, which is physically detached from the main building on the lot and the use of which is incidental to that of the main building or use on the same lot. Where an accessory structure is a part of, or joined to, the main building by means other than a trellis, breezeway or overhang, the accessory structure shall be considered as part of the main building.

Apparent Mass – This is the mass of a structure as we see it from different vantage points, with variations in the structure's shape and surface treatments, and with other objects placed around it. With different emphasis on changes in these characteristics, a structure can be made to appear more or less massive.

Architectural Style – A fashion in which elements of a structure's forms, materials, etc., create a design which can be identified as a particular style. This can include the style of the building which existed when that building was originally constructed.

Articulation – Clear and distinct separation between design elements such as materials, walls and architectural details.

Balance – An important aspect of rhythm. It is described in terms of symmetrical and asymmetrical elements. It is very often achieved by matching differing elements which, when perceived in whole, display balance. Harmonious proportions of elements in a design.

Buildable Area – That portion of a lot that is suitable for the development of structures excluding all required setback areas, easements, areas of extreme slope (thirty-five percent of more) and all other areas where structures are otherwise prohibited.

Building Frontage – Those building elevations which face upon a public street. (See Facade)

Building Height – The maximum vertical dimension of a structure determined under Section 17.02.040 of the Development Code.

Cantilever – A beam or architectural element projecting beyond a wall line without support from below.

Character – A distinctive trait.

Compatibility – Having an architectural style, visual style, visual bulk, massiveness, height, width, and length, which is comparable with the neighborhood and harmonizes with existing structures in the neighborhood and within itself.

Complement – To add to the character of the area by attempting to incorporate similar setback, height, scale, massing and materials.

Cornice – In classical architecture, the top, projecting section of an entablature, any projecting ornamental molding along the top of a building, wall, arch, etc., finishing or crowning.

Detail – An element of a building such as trim, moldings, other ornament, or decorative features.

Dormer – A vertically framed window which projects from a sloping roof and has a roof of its own.

Eaves – The overhang at the lower edge of a roof which usually projects out over the walls.

Earth Tones – Color combinations found in the natural landscape. Muted or subdued colors.

Eclectic – A composition of elements from different architectural styles.

Elevation – The view of a side of a structure shown on an architectural drawing, usually drawn to scale.

Façade – The exterior portion of a building which faces a public street. The facade is usually emphasized architecturally.

Fascia – A flat strip or band with a small projection, often found near the roofline.

Fenestration – The arrangement and design of windows in a building.

Gable – A roof with two sloping planes supported at their ends by triangular upward extensions of two walls known as gables. The triangular part of the exterior wall, created by the angle of a pitched roof.

Hip Roof – A roof with uniformly sloped surfaces.

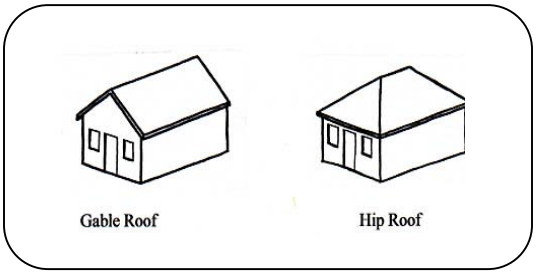

Human Scale – The proportion of a structure or elements within a structure that are small and/or lower to the ground, relative to the size of a person, creating similarity in scale. These are commonly referred to as intimate spaces or elements because of the close relationship of a human being to the space or element.

Interlocking Pavers – Preformed paving blocks that have a groove along one edge and a flange along the other edge; the grooved edge of one block is designed to fit into the flanged edge of the adjoining block, thereby holding them together.

Lintel – The horizontal member above a door or window which supports the wall above the opening.

Lot – A parcel of real property with a separate and distinct number shown on a plat recorded in the office of the County Recorder. See Section 17.96.1040 of the City Development Code for other variations to this definition.

Lot Coverage – That portion of a lot or building site which is occupied by any building or structure, including courtyards which are fully enclosed or which have a maximum of one exterior entrance; trellises; decks over thirty inches in height (as measured from existing adjacent grade); parking areas; or driveways.
(See Section 17.02.040.A.6 for complete definition)

Masonry – Wall construction of such material as stone, brick, block and adobe.

Mass – describes three -dimensional forms, the simplest of which are cubes, boxes, cylinders, pyramids, and cones. While buildings are rarely one of these simple forms, they are generally composites of varying types of masses. Also bulk, size or volume.

Moldings – Projecting materials usually patterned strips, used to provide ornamental variation of outline or contour, such as cornices, bases, window and door jambs and headers.

Mullions – The divisional pieces in a multi-pane window.

Natural Materials – Building materials made of resources found in nature; i.e., wood, clay, slate, stone.

Neighborhood Character – Identity of an area created by such physical features as building scale, orientation, setback, relation to site contours, architectural style and elements such as texture, color and building materials; landscape feature, natural and man-made and the street scene, its dimensions, fixtures style and materials.

Pitch – The slope of a roof expressed in terms of a ratio of rise (height) to span; i.e., 4:12, or 6:12.

Plane – A flat, level or even surface that wholly contains every straight line joining any two points lying on it.

Plate Height – The plate is a horizontal member at the top of a wall where the roof members rest. Lowering the plate height lowers the wall height and effectively lowers the roof eaves, giving the structure a lower profile. Commonly seen in California Ranch style residences. (See Pg. 12.)

Privacy – The reasonable protection from intrusive visual observation.

Proportion – Deals with the ratio of dimensions between elements. Proportion can describe height to height ratios, width to width ratios, width to height ratios, as well as ratios of massing. To arrange the parts of a whole so as to be harmonious.

Ranch Style – The style of architecture made popular in the United States during the 1940s to 1960s, typified by one story, asymmetrical shapes, low-pitched roofs, and wood clapboard siding.

Ridge –The highest line of a roof where sloping planes intersect.

Rhythm – The relationship of buildings to buildings or components of a building to each other. Rhythm relates to the spacing of elements and can be described in terms of proportion, balance, patterns in the timing, spacing, repetition, accenting and emphasis.

Scale – The measurement of the relationship of the size of one object to another object. The scale of a building can be described in terms of its relationship to a human being (see: Human Scale). All of the components of a building also have a relationship to each other and to the building as a whole. Generally, the scale of the building components also relates to the scale of the entire building.
(Scale used as in "drawn to scale" means an architectural drawing, plan or map is drawn very precisely to a ratio such as 1"= 20' or ¼"=1 foot and thus can be used to measure the exact size of things represented upon them.)

Setback – The minimum horizontal distance as prescribed by the Development Code, between any property line or private easement boundary used for vehicular and/or pedestrian access and the closest point on any building or structure, below or above ground level, on the property.

Shed Roof – A sloping single planed roof as seen on a lean-to.

Site – The geographic location of a construction project, usually defined by legal boundaries as in a "lot."

Site Plan – A plan, prepared to scale, showing accurately and with complete dimensioning, all of the structures, improvements, topography and uses proposed for a specific site.

Street View – The visual perspective of a building or collection of structures from the vantage of the adjacent roadway.

Streetscape – The elevation of a residential block which includes primary and accessory structures, landscaping, fencing, street fixtures and other improvements visible from and along the street.

Structure – Anything constructed or built, any edifice or building of any kind, or any piece of work artificially built up or composed of parts joined together in some definite manner, which is located on or on top of the ground.

Style – Design elements which consist of, but are not limited to:

- Façade treatment
- Height of structure
- Open space between structures
- Roof Design
- The apparent bulk or mass of the structure
- The number of stories

Tasteful – Having or showing good judgment or appreciation of what is beautiful, appropriate, harmonious, compatible or excellent in art, architecture, decoration, design, and the like.

Trim – The finished woodwork, plasterwork or the like used to decorate, border, or protect the edges of openings of surfaces.

Variable Setback – An outline of the ground area of a structure within a site that deviates from being built square at the minimum setback lines.

Volume – Cubic square footage of an area measured as the length times the width times the height of the area.

REFERENCES

This document has benefited by reference to the contents of several documents.

1. City of San Marino, Residential Design Guidelines, June 9, 1999.

2. City of Pacific Grove, Architectural Review Guidelines for Single Family Residences, November 18, 1998.

3. A Field Guide to American Houses, Virginia & Lee McAlester, published by: Alfred A. Knopf, 1995.

4. A Pattern Language, Christopher Alexander, Sara Ishikawa, Murray Silverstein, Oxford University Press, 1977.

5. Landscape Architecture, John Ormsbee Simmonds, McGraw-Hill

APPENDICES

A. **Neighborhood Compatibility Findings – Section 17.02.030(B)(2) of the RPVMC.**

B. **Residential Development Standards Chart (Setback, Height and Lot Coverage requirements per zoning district)**

C. **Written Explanation of Residential Development Process Chart (see page 5 of Handbook)**

D. **Neighborhood Compatibility Triggers / Review Process**

E. **Pre-Application Meeting Notice**

F. **Pre-Application Consultation Form**

G. **Project Silhouette Construction Criteria**

H. **Planning Department Fee Schedule**

17.02.030(B) - Neighborhood Compatibility (amended November 3, 2004)

1. The following new single-family residences and additions to existing single-family residences shall be compatible with the character of the immediate neighborhood:

   a. A new residence that is proposed to be developed on a vacant lot;

   b. A new residence that is proposed to replace an existing residence;

   c. An existing residence that is proposed to be remodeled or renovated such that fifty percent or greater of any existing interior and exterior walls or existing square footage is demolished;

   d. An addition to an existing single-family residence or the construction of any new detached structure that individually, or when combined with prior additions cumulatively, results in greater than: (i) 750 square feet of additional floor area, or (ii) a 25% expansion of the total square footage of all of the original structures constructed on the property, including the main residence, the garage, and all detached structures;

   e. The construction of, or an addition to, a new second story or higher story; pursuant to Chapter 17.02 of the Development Code;

   f. Projects that result in lot coverage that exceeds the maximum allowed in Chapter 17.02 of the Development Code;

   g. The construction of, or an addition of a deck, balcony or roof deck to a second story or higher story if the total area of the deck, balcony, or roof deck is eighty (80) square feet or larger or projects more than six (6) feet from the existing building; and,

   h. An addition of a mezzanine to an existing structure that modifies the exterior of the structure other than the placement of flush mounted doors and windows.

2. The projects listed in the following subparagraphs (a through d) shall be exempt from the Neighborhood Compatibility requirements of this Paragraph B. However, no property shall be issued a permit for a project that is subject to the same subparagraph more than once in a two-year period without complying with the Neighborhood Compatibility requirements:

   a. An addition to an existing single-family residence that meets the following criteria:
      i. Is 16-feet or less in height, as measured according to the criteria stated in Section 17.02.040(B); and,
      ii. Is not being constructed along the facade facing any street;
      iii. Is 250 square feet or less in floor area; and,
      iv. Complies with all of the City's residential development standards.

b. An addition or conversion of non-habitable floor area to habitable floor area that does not result in exterior modifications other than the placement of flush mounted doors and windows.

c. The construction of a minor non-habitable accessory structure, such as, but not limited to, a cabana, a pool changing room, a storage shed, or a playhouses, that meet the following criteria:
   i. Is 12-feet or less in height, as measured from lowest adjacent grade as stated in Section 17.48.050(D); and,
   ii. Is less than 250 square feet in floor area; and,
   iii. Complies with all of the City's residential development standards.

d. The enclosure of a roofed breezeway between legally permitted structures or the enclosure of a 250 square foot or less patio cover, provided the enclosure:
   i. Is 16-feet or less in height, as measured according to the criteria stated in Section 17.02.040(B); and,
   ii. Is attached to the primary structure; and,
   iii. Complies with all of the City's residential development standards.

3. As defined in Section 17.02.040(A)(6) of this chapter, neighborhood character means the existing characteristics in terms of the following:

   a. Scale of surrounding residences;
   b. Architectural styles and materials; and
   c. Front, side, and rear yard setbacks.

4. The determination of whether a new single-family residence or an addition to an existing single-family residence is compatible with the neighborhood character shall be made by the director or planning commission in the course of considering the applicable permit application(s) for the proposed residence.

5. Public Notice. Notice for an application that requires a neighborhood compatibility finding shall be published in a newspaper of general circulation and given to owner's of property within five hundred feet of the project, to all persons requesting notice, to any affected homeowners' associations, and the applicant pursuant to Section 17.80.090 (Notice of Hearing) of this title. Said notice shall be given at least fifteen days prior to a decision on the application.

TABLE 02-A: SINGLE-FAMILY RESIDENTIAL DEVELOPMENT STANDARDS

For exceptions and explanatory descriptions of these standards and for other development standards that apply to single-family residential areas, see Articles VI and VII of this title. The number which follows an "RS-" designation indicates the maximum number of lots per acre permitted in the zone; the "RS-A" number indicates the minimum number of acres per lot permitted.

DISTRICT	LOT DIMENSIONS[1]			MINIMUM SETBACKS[3,6] FOR CITY CREATED LOTS					MINIMUM SETBACKS[2,3,6] FOR LOTS CREATED PRIOR TO INCORPORATION / ANNEXATION				MAXIMUM LOT COVERAGE	MAXIMUM HEIGHT[3,4,7]	PARKING REQUIREMENT[5]
	AREA	WIDTH	DEPTH	FRONT	INTERIOR SIDE		STREET SIDE	REAR	FRONT	INTERIOR SIDE	STREET SIDE	REAR			less than 5,000 s.f. of habitable space = 2 enclosed garage spaces 5,000 s.f. or more of habitable space = 3 enclosed garage spaces
					TTL BOTH SIDES	ONE SIDE									
RS-A5	5 acres	200	300	20	30	10	20	20	20	5	10	15	6%	16	
RS-1	1 acre	100	150	20	25	10	20	20	20	5	10	15	25%	16	
RS-2	20,000 sf	90	120	20	20	10	20	20	20	5	10	15	40%	16	
RS-3	13,000 sf	80	110	20	20	10	20	15	20	5	10	15	45%	16	
RS-4	10,000 sf	75	100	20	20	10	20	15	20	5	10	15	50%	16	
RS-5	8,000 sf	65	100	20	20	10	20	15	20	5	10	15	52%	16	

1. For an existing lot which does not meet these standards, see Chapter 17.84 (Nonconformities).
2. Lots of record, existing as of November 25, 1975 (adoption of this code), or within Eastview and existing as of January 5, 1983 (annexation), shall use these development standards for minimum setbacks.
3. For description, clarification and exceptions, see Chapter 17.48 (Lots, Setbacks, Open Space Area and Building Height).
4. For a description of height measurement methods and the height variation process, see Section 17.02.040 of this chapter. A height variation application shall be referred directly to the planning commission for consideration, if any of the following is proposed:
   A. Any portion of a structure which exceeds sixteen (16) feet in height extends closer than twenty-five (25) feet from the front or street-side property line.
   B. The area of the structure which exceeds sixteen (16) feet in height (second story footprint) exceeds seventy-five percent (75%) of the existing first story footprint area (residence and garage); and
   C. Sixty percent (60%) or more of an existing garage footprint is covered by a structure which exceeds sixteen (16) feet in height (a second story).
   D. The portion of a structure that exceeds sixteen feet in height is being developed as part of a new single-family residence; or
   E. Based on an initial site visit, the director determines that any portion of a structure which is proposed to exceed sixteen (16) feet in height may significantly impair a view as defined in this chapter.
5. For parking development standards, see Section 17.02.030(B) of this chapter.
6. A garage with direct access driveway from the street of access shall not be less than twenty feet from the front or street-side property line, which ever is the street of access.
7. Exterior stairs to an upper story are prohibited, unless leading to and/or connected to a common hallway, deck or entry rather than a specific room.

SINGLE-FAMILY RESIDENTIAL DEVELOPMENT PROJECT PROCESS CHART

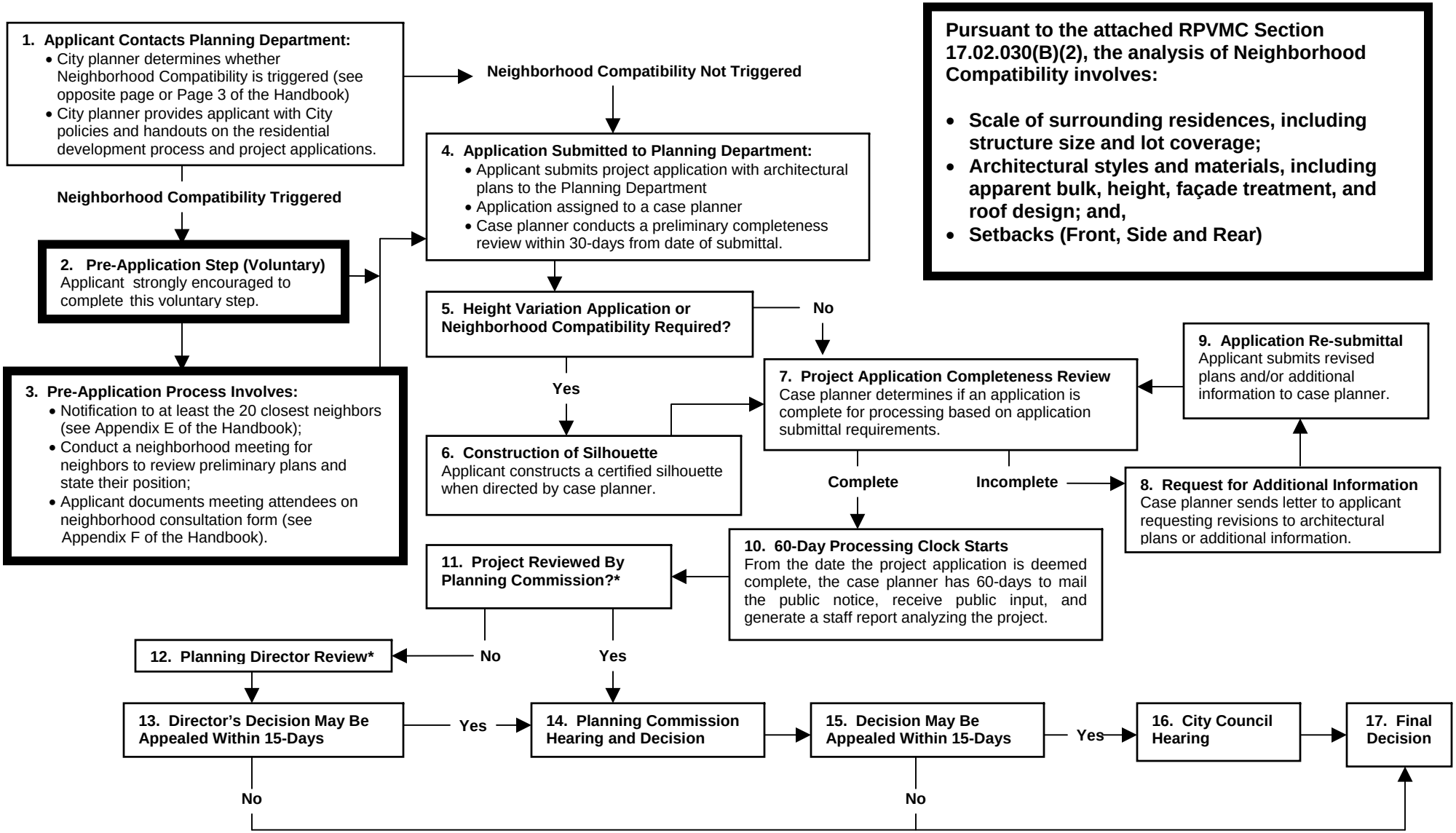

Pursuant to the attached RPVMC Section 17.02.030(B)(2), the analysis of Neighborhood Compatibility involves:

- **Scale of surrounding residences, including structure size and lot coverage;**
- **Architectural styles and materials, including apparent bulk, height, façade treatment, and roof design; and,**
- **Setbacks (Front, Side and Rear)**

*The review process depends on the application requested. For more information see the flip side of this flow chart or Page 8 of the Neighborhood Compatibility Handbook, City Staff or the appropriate Code sections pertaining to the requested application.
The above boxes outlined in bold represent steps involved in the analysis of Neighborhood Compatibility

NC - C
Revised: 5/6/03

RESIDENTIAL DEVELOPMENT PROCESS

The following is a summary of the typical steps involved in processing a single-family residential development project in the City of Rancho Palos Verdes. Each of the following steps corresponds to the Process Flow Chart on Page 6 of the Handbook or on the previous page. It should be noted that the steps identified below represent the typical process and may vary depending on the complexity of a project.

1. A property owner who is contemplating the construction of a new single-family residence or an addition to an existing residence contacts the Planning Department for information regarding the City's process and development standards. Based on the information conveyed to City Staff, the property owner will be given the criteria for their specific zoning district, as well as the appropriate development applications. It is also at this time that City Staff determines whether the Neighborhood Compatibility analysis is triggered (see Appendix D - Neighborhood Compatibility Triggers). Please note that the development applications given to a property owner are based on information provided to Staff and may change upon formal submittal and review of the project.

2. If the Neighborhood Compatibility analysis is triggered, the City strongly encourages the property owner to complete the suggested Pre-Application Step. It should be noted that this is a voluntary step in the residential development process for the City of Rancho Palos Verdes that has been found to be helpful in addressing neighborhood issues early in the process that typically cause delays in the formal process.

3. The Pre-Application Step involves three action items:

    a. <u>Notification to at least the 20 closest neighbors</u> – A project requiring Neighborhood Compatibility is normally analyzed based on at least the 20 closest homes within the same zoning district, which are also the homes most likely to be affected by the project (for information regarding the Neighborhood Compatibility findings please see Appendix A - RPVMC 17.02.030(B)(2)). Therefore, notification to the 20 closest residences is a Pre-Application step. However, since property owners within a 500-foot radius will receive a public notice by the City during the formal review process, it is strongly encouraged that notification also be given to potentially affected property owners within a 500-foot radius. The Pre-Application notice should indicate the date, time, and location of a neighborhood meeting (see Appendix E - Pre-Application Neighborhood Compatibility Meeting Notice).

    b. <u>Conduct a Neighborhood Meeting</u> – An applicant should conduct a meeting with the neighbors. The neighborhood meeting is to provide the neighbors with an opportunity to review the preliminary plans and voice their concerns. It is suggested that the meeting occur in the early evening, over the weekend or at a time when most neighbors are available.

    c. <u>Meeting Documentation</u> – In order to complete the Pre-Application Step an applicant is encouraged to obtain verification that the 20 closest neighbors have reviewed the preliminary plans. Said verification may be achieved by

completing the attached sample form (see Appendix F - Neighborhood Compatibility Pre-Application Consultation Form).

4. If a project does not trigger the Neighborhood Compatibility analysis or the Pre-Application Step is not desired, the next step involves the preparation of the architectural plans and the completion of the appropriate application for formal submittal to the City's Planning Department. At the time a property owner submits a development application to the Planning Department, City Staff will routinely conduct a cursory review of the application and the architectural plans at the public counter for oversights prior to receiving the project. It is at this time that the appropriate filing fees are paid. Once an application has been filed with the Planning Department, the project is assigned to a case planner based on workload and level of experience. Within three to four working days from the date of submittal, the property owner will receive a letter from the City informing them of their assigned case planner. It should be noted that the case planner has 30 days from the date of submittal to review the application and architectural plans for completeness.

5. If a Height Variation application or any other application requiring the Neighborhood Compatibility analysis is requested, the property owner will be required to construct a silhouette that depicts the proposed project before an application is deemed complete for processing.

6. In order to minimize costs involved in constructing a silhouette, it is advised that a property owner not construct the required certified silhouette until directed to do so by the case planner. This is recommended because a project may undergo revisions before being deemed complete for processing. Once directed to construct the silhouette, the applicant should follow the City's criteria for construction a silhouette (see Appendix G).

7. Pursuant to State Law, a project submitted to the Planning Department must be reviewed for completeness within 30 calendar days from the date of submittal. The "completeness review" involves a comprehensive review of the project applications and architectural plans for completeness and accuracy. Within the 30-day "completeness review" period, if the project applications or architectural plans are missing information needed to process the property owner's request, Staff will deem the project "incomplete."

8. If an application is deemed "incomplete," a letter will be sent to the property owner/applicant within the 30-day review period identifying the information that is needed in order to deem the project application complete for processing. At this time, the case planner will also notify the property owner of any "concerns" observed during the initial review of the proposed project. It should be noted that additional Staff concerns may arise after a project has been publicly noticed and public input is obtained.

9. Once an application has been deemed "incomplete" by the City, the property owner is responsible for providing Staff with the appropriate information needed to continue processing the project. A property owner should use the "Incomplete Letter" sent by the case planner as a checklist. Upon the submittal of revised plans or additional information to the Planning Department, Step No. 7 is repeated.

Step No. 7 is repeated upon the submittal of the outstanding information requested by the case planner. After reviewing the revised or additional information, if the case planner determines said information is acceptable, then the project applications will be deemed "complete." A "complete" letter will be sent to the property owner indicating that a decision on the project application will be made within 60 calendar days from the date of completeness. Furthermore, if required, the letter will also indicate a tentative date for a public hearing.

10. Pursuant to State Law, a decision on a typical project application must be made within 60 calendar days from the date of completeness. During the 60-day processing period, the following steps occurs:

    a. If public notification is required, a public notice will be sent to property owners within a 500-foot radius, interested parties and published in a local newspaper (*Peninsula News*) at least 15 days before a decision is made. Please note that a Height Variation application requires at least a 30-day public notification period. It is during the public noticing period that the City receives public comments or concerns on a project.

    b. Prior to rendering a decision on a project, a Staff Report is prepared by the case planner that analyzes the project based on the required application findings. Furthermore, the Staff Report identifies any concerns raised during the public noticing period. Based on Staff's analysis, the Staff Report will contain a recommendation, consisting of either approval, approval with conditions, or denial.

    c. The Staff Report prepared by the case planner is then provided to the Planning Director or to the Planning Commission for consideration and is also made available to the applicant. If the Planning Commission is the deciding body on a project, a decision on a project will be made at a duly noticed public hearing.

11. The review process of a project depends on the application requested. Please see Appendix D - Review Process, for further information.

12. If a project is reviewed by the Planning Director, the Staff Report will be given to the Director for review. The Director will consider the analysis of the required findings and the concerns raised during the public noticing period prior to rendering a decision. Please note that at any given time, a property owner or a concerned resident may schedule a meeting with the Planning Director to discuss project related concerns.

13. The Planning Director's decision may be appealed to the Planning Commission within 15 days of the action date. An appeal must be filed with the Planning Department along with the appropriate filing fee (see Appendix H - Fee Schedule). The appeal must list the parties involved and the reason for the appeal. The appeal will be agendized at the next available Planning Commission meeting. A public notice on the appeal will be mailed to the appellants, property owners within a 500-foot radius, to interested parties and published in the local newspaper (*Peninsula News*). If no appeal is filed within the 15-day appeal period, then the Planning Director's decision is final.

14. A project requiring the Planning Commission's review, including an appeal of the Planning Director's decision, will be considered by the Commission at a duly noticed public hearing. The Planning Commission will consider the analysis of the required

findings and the concerns raised during the public noticing period prior to rendering a decision. Please note that concerned residents are encouraged to attend the public hearing and provide the Planning Commission with public testimony on the project related issues.

15. The Planning Commission's decision may also be appealed to the City Council within 15 days of the action date. An appeal must be filed with the Planning Department along with the appropriate filing fee (see Appendix G - Fee Schedule). The appeal must list the parties involved and the reason for the appeal. The appeal will be agendized at the next available City Council meeting. A public notice on the appeal will be mailed to the appellants, property owners within a 500-foot radius, interested parties and published in the local newspaper (*Peninsula News*). If no appeal is filed within the 15-day appeal period, then the Planning Commission's decision is final.

16. A project requiring the City Council's review, including an appeal of the Planning Commission's decision, will be considered by the Council at a duly noticed public hearing. The City Council will consider the analysis of the required findings, the reasons for the Planning Commission's decision, the concerns raised during the public noticing period, and the merits of the appeal prior to rendering a decision. Please note that concerned residents, especially the appellant(s), are encouraged to attend the public hearing and provide the City Council with public testimony on the project related issues.

17. The Planning Director's and Planning Commission's decision that is not appealed, as well as the City Council's decision is final. Please note that projects involving a Coastal Permit may not become final until the appeal process with the California Coastal Commission has been exhausted.

M:\NEIGHBORHOOD COMPATIBILITY\STEERING COMMITTEE\APRIL 8, 2003\WRITTEN DEVELOPMENT PROCESS.doc

NEIGHBORHOOD COMPATIBILITY TRIGGERS

Residential development projects that involve one or more of the following triggers will require the City's review of Neighborhood Compatibility (see process chart on opposite page for more information regarding the process):

B. Neighborhood Compatibility.

1. The following residential development projects shall be compatible with the character of the immediate neighborhood:
   a. A new residence that is proposed to be developed on a vacant lot;
   b. A new residence that is proposed to replace an existing residence;
   c. An existing residence that is proposed to be remodeled or renovated such that fifty percent or greater of any existing interior and exterior walls or existing square footage is demolished;
   d. An addition to an existing single-family residence or the construction of any new detached structure that individually, or when combined with prior additions cumulatively, results in greater than: (i) 750 square feet of additional floor area, or (ii) a 25% expansion of the total square footage of all of the original structures constructed on the property, including the main residence, the garage, and all detached structures;
   e. The construction of, or an addition to, a new second story or higher story; pursuant to Chapter 17.02 of the Development Code;
   f. Projects that result in lot coverage that exceeds the maximum allowed in Chapter 17.02 of the Development Code;
   g. The construction of, or an addition to, a deck, balcony or roof deck to a second story or higher story if the total area of the deck, balcony or roof deck is eighty (80) square feet or larger or projects more than six (6) feet from the existing building; and,
   h. An addition of a mezzanine to an existing structure that modifies the exterior of the structure other than the placement of flush mounted doors and windows.

2. The projects listed in the following subparagraphs (a through d) shall be exempt from the Neighborhood Compatibility requirements of this Paragraph B. However, no property shall be issued a permit for a project that is subject to the same subparagraph more than once in a two-year period without complying with the Neighborhood Compatibility requirements:

   a. An addition to an existing single-family residence that meets the following criteria:
      i. Is 16-feet or less in height, as measured according to the criteria stated in Section 17.02.040(B); and,
      ii. Is not being constructed along the facade facing any street; and,
      iii. Is 250 square feet or less in floor area; and,
      iv. Complies with all of the City's residential development standards.

b. An addition or conversion of non-habitable floor area to habitable floor area that does not result in exterior modifications other than the placement of flush mounted doors and windows.

c. The construction of a minor non-habitable accessory structure, such as, but not limited to, a cabana, a pool changing room, a storage shed, or a playhouse, that meets the following criteria:
   i. Is 12-feet or less in height, as measured from lowest adjacent grade as stated in Section 17.48.050(D); and,
   ii. Is less than 250 square feet in floor area; and,
   iii. Complies with all of the City's residential development standards.

d. The enclosure of a roofed breezeway between legally permitted structures or the enclosure of a 250 square foot or less patio cover, provided the enclosure:
   i. Is 16-feet or less in height, as measured according to the criteria stated in Section 17.02.040(B); and,
   ii. Is attached to the primary structure; and,
   iii. Complies with all of the City's residential development standards.

The Director shall refer a development application directly to the Planning Commission for consideration as part of a public hearing if any of the following is proposed:

1. Any portion of a structure that exceeds sixteen (16) feet in height and extends closer than twenty-five (25) feet from the front or street-side property line; or

2. The area of the structure that exceeds sixteen (16) feet in height (the second story footprint) and exceeds seventy-five percent (75%) of the existing first story footprint area (residence and attached garage); or

3. Sixty percent (60%) or more of an existing garage footprint that is covered by a structure that exceeds sixteen (16) feet in height (a second story); or

4. The portion of the structure which exceeds sixteen (16) feet in height is being developed as part of a new single-family residence; or

5. Based on an initial site visit, the Director determines that any portion of a structure that is proposed to exceed sixteen (16) feet in height may significantly impair a view as defined in Section 17.02.040 of the RPVMC; or

6. Grading involving more than 1,000 cubic yards of combined cut and fill.

NEIGHBORHOOD COMPATIBILITY
PRE-APPLICATION MEETING NOTICE

Date:_____

Dear Neighbor:

This notice is to inform you that I am contemplating the construction of the following project at the following address: _____
_____
_____
_____.
Pursuant to Section 17.02.030 of the Rancho Palos Verdes Municipal Code (RPVMC) the contemplated project is required to comply with the City's Neighborhood Compatibility requirement.

According to Rancho Palos Verdes' Neighborhood Compatibility Guidelines, the City strongly encourages input from the immediate neighbors (20 closest property owners) early in the development process. Therefore, as recommended by the City, I plan to have a pre-application meeting to provide you with an opportunity to review the project plans and to identify any concerns you may have. The pre-application neighborhood meeting will occur on:

(insert meeting date) _____

(insert meting time) _____

(insert meeting location) _____

Your attendance is strongly encouraged so that we may discuss potential concerns and impacts the contemplated project may create. Your attendance and input at the pre-application neighborhood meeting would be useful and appreciated. I can be reached at the following number _____for confirmation or any other related matters or questions.

Sincerely,

(insert name)

NEIGHBORHOOD COMPATIBILITY CONSULTATION FORM

PROJECT ADDRESS: _____

APPLICANT: _____

APPLICANT'S PHONE NUMBER: _____

THE FOLLOWING PROPERTY OWNERS WERE NOTIFIED, AS PART OF THE CITY'S RECOMMENDED PRE-APPLICATION PROCESS, OF OUR INTENT TO SUBMIT A PROJECT APPLICATION REQUIRING THE NEIGHBORHOOD COMPATIBILITY ANALYSIS. THIS PROJECT INVOLVES THE CONSTRUCTION OF (PROJECT DESCRIPTION)_____
_____
AT A MAXIMUM PROPOSED HEIGHT OF _____ FEET. THE PROPOSED PROJECT IS LOCATED AT THE ABOVE ADDRESS AND THE NEIGHBORS WITHIN THE TWENTY (20) CLOSEST PROPERTIES OF THE PROJECT SITE WERE SHOWN A COPY OF THE MOST RECENT PROJECT PLANS THAT WILL BE CONSIDERED BY THE PLANNING DEPARTMENT. **PLEASE NOTE THAT BY SIGNING THIS NOTICE, THE UNDERSIGNED ONLY ACKNOWLEDGE THAT THEY HAVE BEEN CONSULTED AND THE SIGNATURES DO NOT SIGNIFY APPROVAL OF ANY KIND.**

LOT # (as shown on radius map)	ADDRESS	PRINTED NAME OF LAND OWNER	SIGNATURE	REVIEWED PLANS? Y/N
Comments:				
Comments:				
Comments:				
Comments:				

ATTENTION APPLICANT: IF ADDITIONAL SPACE IS NEEDED, PLEASE COPY THIS FORM AND OBTAIN ALL SIGNATURES IN THIS FORMAT.

SILHOUETTE CONSTRUCTION CRITERIA

If a residential development project requires a Height Variation application or a Neighborhood Compatibility analysis, the property owner/applicant will be required to construct a certified silhouette that depicts the proposed project. In order to minimize costs involved in constructing a silhouette, it is advised that the silhouette not be constructed until directed to do so by the case planner. It is important to note that a residential development project that requires a silhouette will not be deemed "complete" for processing without required certification of the silhouette by a licensed land surveyor or a licensed engineer.

PLEASE FOLLOW THESE DIRECTIONS EXACTLY

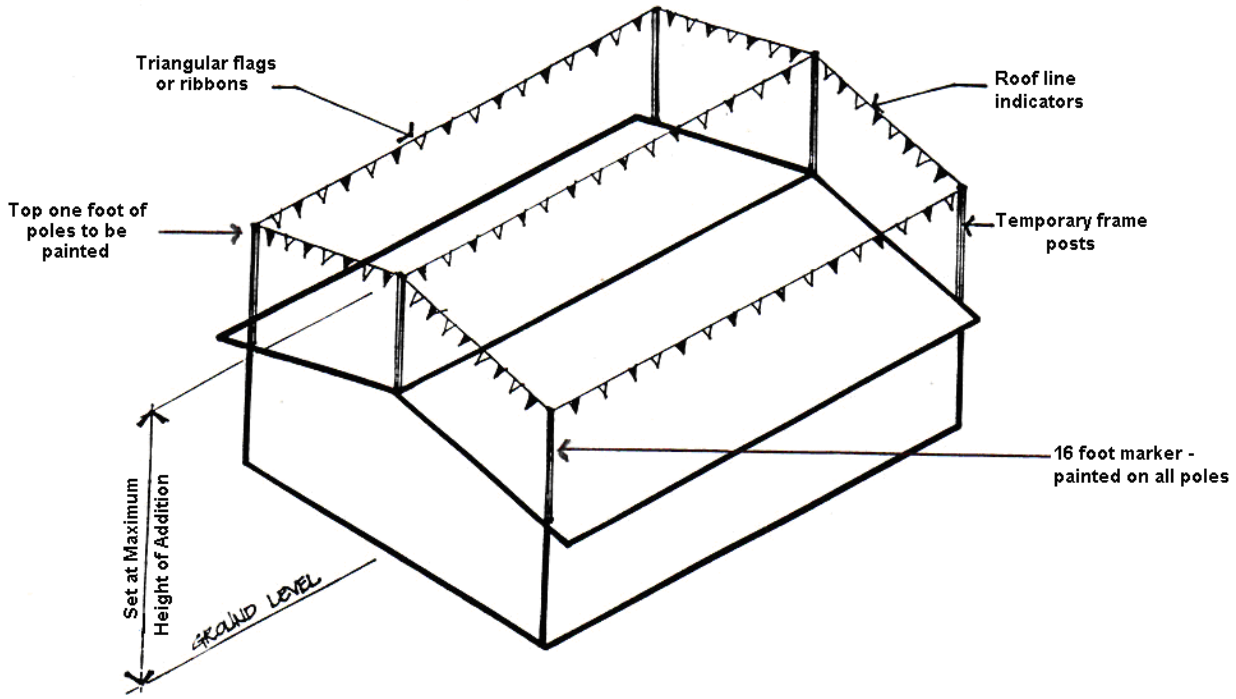

1. The temporary silhouette shall, at a minimum, consist of wood posts (or other sturdy and rigid material - 2" x 4"s are typical) at all corners of the structure(s) and/or main building masses and at either end of all proposed ridgelines, with a taut rope (of ½" diameter), marked by **triangular flagging or ribbons** connecting the posts (see above diagram). If ribbons are used, the ribbons should be bright colored at a minimum width of 3-inches and should be affixed to string at 12-inch increments.

2. The top one foot of the posts shall be **painted red or orange** to better demarcate the height of the proposed structure in photo analyses. If the project proposes to exceed the "by-right" height limit of the underlying zoning designation for the property, a similar mark shall be placed using a different, but equally visible, color on the posts at the "by-right" height limit, as measured pursuant to the City's code. Please consult with your case planner regarding the applicable method for determining the "by-right" height limit for your project.

3. The applicant shall, at the time of submittal of an application to the City, sign a waiver (see project application) which absolves the City of any liability associated with construction of, or damage by, the temporary silhouette. **The applicant shall not construct the temporary silhouette until and the waiver form is submitted to the City.** The applicant shall notify the case planner when the silhouette is in place.

4. Once the project silhouette is constructed, a licensed engineer or surveyor shall certify that the silhouette accurately depicts the location and height (including the color demarcation on the silhouette posts) of the proposed development. (see attached certification form). **A project will not be deemed "complete" for processing without the required certification.**

5. The Silhouette Certification Form **shall be accompanied by a site plan** that identifies the location of the silhouette posts, the existing grade elevation call-outs for the base of the posts (if posts touch existing grade), and the elevation call-outs for the top of the posts. If the silhouette is constructed entirely above an existing structure so that the posts supporting the silhouette do not touch existing grade, then the site plan must include the existing grade elevation closest to the existing structure and the supporting silhouette posts.

6. City Staff will conduct a site inspection to review the adequacy of the silhouette's depiction of the proposed project. Adequacy will be based on an accurate depiction of the proposed project's envelope, accurate delineation of ridgelines, and the proper flagging.

7. **The silhouette must remain in place and be maintained in good condition throughout the required notice period for the Height Variation application or the Neighborhood Compatibility analysis process, the decision process and, if necessary, any appeal periods.** The frame may not be removed until the City's appeal process has been exhausted and a final decision has been rendered. **The applicant must remove the frame within seven (7) days after a final decision has been rendered and the City's appeal process has been exhausted.**

SEE NEXT PAGE FOR SILHOUETTE CERTIFICATION FORM

SILHOUETTE CERTIFICATION FORM

THIS CERTIFICATION FORM MUST BE COMPLETED BY A LICENSED LAND SURVEYOR OR A LICENSED ENGINEER. THIS FORM MUST BEAR AN ORIGINAL WET STAMP AND SIGNATURE IN ORDER TO BE VALID. THIS FORM MUST ALSO BE ACCOMPANIED BY A SITE PLAN THAT IDENTIFIES THE LOCATION OF THE SILHOUETTE POSTS, THE EXISTING GRADE OR SUPPORTING STRUCTURE ELEVATION CALL-OUTS AT THE BASE OF THE POSTS, AND THE ELEVATION CALL-OUTS FOR THE TOP OF THE POSTS. ANY MISSING INFORMATION WILL RENDER THE SUBJECT APPLICATION "INCOMPLETE" FOR PROCESSING.

I have measured the location and height (including the color demarcation) of the silhouette posts located at the project site (address)_____ _____ on (date) _____ and I have found that the project silhouette accurately depicts the location and height (including the color demarcation) of the proposed structure presented on the architectural plans prepared by (name of architectural firm) _____on (date) _____ for the proposed project currently being considered by the City of Rancho Palos Verdes (Planning Case No. _____).

Signature _____

LS/RCE _____

Date _____

Revised: June 3, 2011

W:\Forms\Plng\apps\SILHOUETTE CRITERIA.doc