ASG09

30452 CAMINO PORVENIR
RANCHO PALOS VERDES, CA

SIGN OFF

TITLE	SIGNATURE	DATE
NETWORK REAL ESTATE		
PROJECT MANAGER		
CONSTRUCTION MANAGER		
RADIO FREQUENCY		

SHEET NO.	DESCRIPTION
T-1	TITLE SHEET
D-1	DETAILS & NOTES
D-2	DETAILS & NOTES
D-3	DETAILS & NOTES
D-4	DETAILS & NOTES
D-5	DETAILS & NOTES
S-1	SITE PHOTOS
P-1	SITE PLAN
P-2	POLE PROFILE

SHEET INDEX

GENERAL CONTRACTOR NOTES:

CONTRACTOR SHALL VERIFY ALL PLANS AND EXISTING DIMENSIONS AND CONDITIONS ON THE JOB SITE AND SHALL IMMEDIATELY NOTIFY THE ENGINEER IN WRITING OF ANY DISCREPANCIES BEFORE PROCEEDING WITH THE WORK OR RESPONSIBLE FOR SAME.

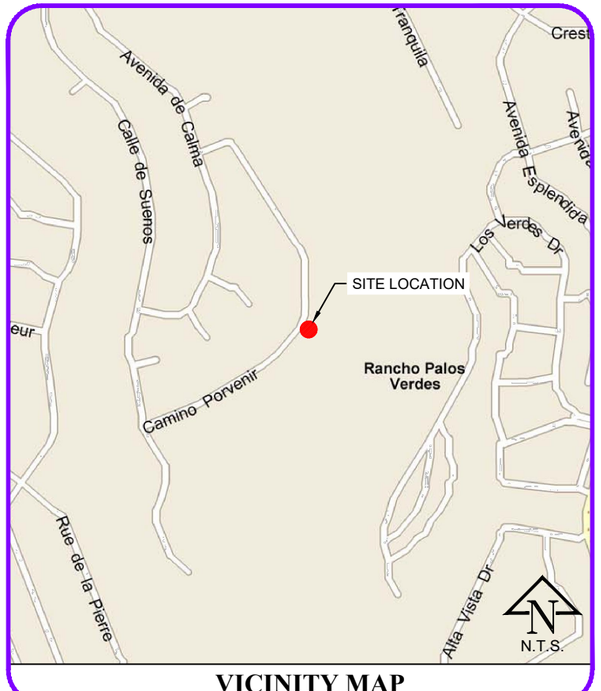

VICINITY MAP

PROJECT DESCRIPTION:

- DECOMMISSION & REMOVE EXISTING 24' 0" HIGH MARBELITE OCTAGONAL STREETLIGHT (POLE ID #1983568E) AND REPLACE WITH A NEW 24' 0" HIGH CONCRETE TEXTURED STEEL POLE WITH MAST ARM AND LUMINARE (REMOVE EXISTING JUNIPER).
- INSTALL (1) CROWN CASTLE 4' X 6' VAULT, FLUSH MOUNT VENTS WITH, METER & POWER DISCONNECT BOX WITH (2) ML IONS INSIDE.
- INSTALL (2) 21.4" ANTENNAS #HPA-65F-BUU-H2 WITH CONCEALFAB TOP MOUNT AND SHROUD.
- INSTALL CROWN CASTLE WTR 2' X 3' VAULT.
- INSTALL VGR.
- EQUIPMENT AND ANTENNAS TO BE PAINTED TO MATCH POLE.

100AMP PANEL
120/240V 1PHASE
1.1KW 0TON
3787 1/2 CREST RD
RANCHO PALOS VERDES, CA 90274

PROJECT SUMMARY

PROJECT MANAGER:
CROWN CASTLE
200 SPECTRUM CENTER DR STE. 1800
IRVINE, CA 92618
JON COWELL
(925) 200-6857
JON.COWELL.VENDOR@CROWNCASTLE.COM

CONSTRUCTION ENGINEER:
CROWN CASTLE
200 SPECTRUM CENTER DR STE. 1800
IRVINE, CA 92618
KENNETH HOBBS
(714) 251-9839
KENNETH.HOBBS@CROWNCASTLE.COM

NODE ENGINEER:
COASTAL COMMUNICATIONS
9524 TOPANGA CANYON BLVD.
CHATSWORTH, CA 91311
CURTISS JOHNSON
(760) 932-4312
CURTISS@COASTALCOMMINC.COM

PROJECT TEAM

ASG09

PHASE II

CROWN CASTLE PROJECT NO.
242727

CLIENT:
CROWN CASTLE
200 SPECTRUM CENTER DRIVE, 18TH FLOOR
IRVINE, CA 92618
www.crowncastle.com

PREPARED BY:
Coastal Communications
Telecommunications Engineering
5841 EDISON PLACE, SUITE 200
CARLSBAD, CA 92008
PHONE: (760) 929-0910
FAX: (760) 929-0936

PROPRIETARY INFORMATION

THE INFORMATION CONTAINED IN THIS SET OF DRAWINGS IS PROPRIETARY AND CONFIDENTIAL TO AT&T. ANY USE OR DISCLOSURE OTHER THAN AS IT RELATES TO AT&T IS STRICTLY PROHIBITED.

DIGALERT
1-800-227-2600
CALL AT LEAST TWO DAYS BEFORE YOU DIG
UNDERGROUND SERVICE ALERT
TICKET #

REVISION / ISSUE	DATE
CITY REDLINE	11/09/15
MOVED CISH AND CATV PEDESTAL	7/11/17

SITE NAME & ADDRESS:
ASG09
30462 CAMINO PORVENIR
RANCHO PALOS VERDES, CA

TITLE SHEET

DRAWN BY:	DRAFT DATE:	APPROVED BY:
AC	10/07/15	GA

SHEET NO.
T-1

LEGEND

SYMBOL	DESCRIPTION
	PROPOSED
	2' X 3' VAULT
	NEW POLE
	NEW STREETLIGHT
	TRENCH AND FIBER CONDUIT (PVT)
	EXISTING
	EXISTING STREETLIGHT
	EXISTING VAULT / HANDHOLE
	EXISTING PEDESTAL
	EXISTING TRANSFORMER
	STATION POINTS (100' INCREMENTS)
	EXISTING CURB RAMP
C&G	EXISTING CURB & GUTTER
A/C	EXISTING ASPHALT CURB
EOP	EXISTING EDGE OF PAVEMENT
BERM	EXISTING BERM
R/W	EXISTING RIGHT OF WAY
S/B	SUBDIVISION BOUNDARY
℄	EXISTING CENTER LINE
℄	EXISTING CENTER LINE

ABBREVIATIONS

A/C	ASPHALT CURB
C&G	CURB & GUTTER
CL	CENTERLINE
EX	EXISTING
EOP	EDGE OF PAVEMENT
PL	PROPERTY LINE
R/W	RIGHT OF WAY
S/B	SUBDIVISION BOUNDARY

EROSION AND SEDIMENT CONTROL NOTES:

TEMPORARY EROSION/SEDIMENT CONTROL, PRIOR TO COMPLETION OF FINAL IMPROVEMENTS, SHALL BE PERFORMED BY THE CONTRACTOR OR QUALIFIED PERSON AS INDICATED BELOW:

1. ALL REQUIREMENTS OF THE CITY OF RANCHO PALOS VERDES ``LAND DEVELOPMENT MANUAL, STORM WATER STANDARDS" MUST BE INCORPORATED INTO THE DESIGN AND CONSTRUCTION OF THE PROPOSED PUBLIC IMPROVEMENTS CONSISTENT WITH THE EROSION CONTROL PLAN AND/OR WATER POLLUTION CONTROL PLAN (WPCP), IF APPLICABLE.
2. FOR STORM DRAIN INLETS, PROVIDE A GRAVEL BAG SILT BASIN IMMEDIATELY UPSTREAM OF INLET AS INDICATED ON DETAILS.
3. THE CONTRACTOR OR QUALIFIED PERSON SHALL BE RESPONSIBLE FOR CLEANUP OF SILT AND MUD ON ADJACENT STREET(S) AND STORM DRAIN SYSTEM DUE TO CONSTRUCTION ACTIVITY.
4. THE CONTRACTOR SHALL REMOVE SILT AND DEBRIS AFTER EACH MAJOR RAINFALL.
5. EQUIPMENT AND WORKERS FOR EMERGENCY WORK SHALL BE MADE AVAILABLE AT ALL TIMES DURING THE RAINY SEASON.
6. THE CONTRACTOR SHALL RESTORE ALL EROSION/SEDIMENT CONTROL DEVICES TO WORKING ORDER TO THE SATISFACTION OF THE CITY ENGINEER OR RESIDENT ENGINEER AFTER EACH RUN-OFF PRODUCING RAINFALL.
7. THE CONTRACTOR SHALL INSTALL ADDITIONAL EROSION/SEDIMENT CONTROL MEASURES AS MAY BE REQUIRED BY THE RESIDENT ENGINEER DUE TO UNFORESEEN CIRCUMSTANCES, WHICH MAY ARISE.
8. ALL EROSION/SEDIMENT CONTROL MEASURES PROVIDED PER THE APPROVED IMPROVEMENT PLAN SHALL BE INCORPORATED HEREON. ALL EROSION/SEDIMENT CONTROL FOR INTERIM CONDITIONS SHALL BE DONE TO THE SATISFACTION OF THE RESIDENT ENGINEER.
9. ALL REMOVABLE PROTECTIVE DEVICES SHOWN SHALL BE IN PLACE AT THE END OF EACH WORKING DAY WHEN RAIN IS IMMINENT.
10. THE CONTRACTOR SHALL ARRANGE FOR WEEKLY MEETINGS DURING OCTOBER 1ST TO APRIL 30TH FOR PROJECT TEAM (GENERAL CONTRACTOR, QUALIFIED PERSON, EROSION CONTROL SUBCONTRACTOR IF ANY, ENGINEER OF WORK, OWNER/DEVELOPER AND THE RESIDENT ENGINEER) TO EVALUATE THE ADEQUACY OF THE EROSION/SEDIMENT CONTROL MEASURES AND OTHER RELATED CONSTRUCTION ACTIVITIES.

STORMDRAIN INLET PROTECTION

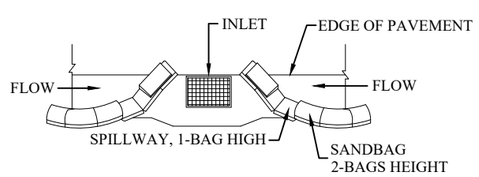

TYPICAL PROTECTION FOR INLET WITH OPPOSING FLOW DIRECTIONS

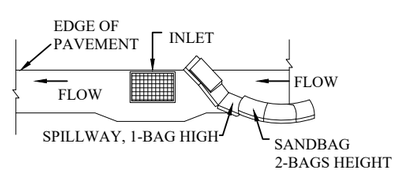

TYPICAL PROTECTION FOR INLET WITH SINGLE FLOW DIRECTION

NOTES:

1. INTENDED FOR SHORT - TERM USE.
2. USE TO INHIBIT NON - STORM WATER FLOW.
3. ALLOW FOR PROPER MAINTENANCE AND CLEANUP.
4. BAGS MUST BE REMOVED AFTER ADJACENT OPERATION IS COMPLETED.
5. NOT APPLICABLE IN AREAS WITH HIGH SILTS AND CLAYS WITHOUT FILTER FABRIC.

NOTES:

1. CONTRACTOR TO POTHOLE ALL UTILITY CROSSINGS.
2. CONTRACTOR TO PLACE SANDBAGS AROUND ANY/ALL STORM DRAIN INLETS TO PREVENT CONTAMINATED WATER.
3. SPOILS PILE WILL BE COVERED AND CONTAINED AND STREET WILL BE SWEPT AND CLEANED AS NEEDED.
4. CONTRACTOR TO REPAIR DAMAGED PUBLIC IMPROVEMENTS TO THE SATISFACTION OF THE CITY ENGINEER.
5. CURB & GUTTER TO BE PROTECTED IN PLACE. SIDEWALK TO BE REPLACED TO THE SATISFACTION OF THE CITY ENGINEER.
6. THE CONTRACTOR SHALL RESTORE THE ROADWAY BACK TO ITS ORIGINAL CONDITION SATISFACTORY TO THE CITY ENGINEER INCLUDING, BUT NOT LIMITED TO PAVING, STRIPING, BIKE LANES, PAVEMENT LEGENDS, SIGNS, AND TRAFFIC LOOP DETECTORS.
7. SIDEWALK SHALL BE RESTORED/REPLACED PER CITY OF RANCHOS PALOS VERDES STANDARD DRAWINGS.
8. PEDESTRIAN RAMP WILL NOT BE DISTURBED.

ROW GROUND CONSTRUCTION NOTES:

1. GROUND CONSTRUCTION TO REMOVE/CLEAN ALL DEBRIS, NAILS, STAPLES, OR NON-USED VERTICALS OFF THE POLE.
2. ALL CONSTRUCTION SHALL BE IN ACCORDANCE WITH MUNICIPAL, COUNTY, STATE, FEDERAL, GO95 AND GO128 STANDARDS AND REGULATIONS.
3. CALL USA 48 HOURS PRIOR TO EXCAVATING AT (800) 227-2600 OR 811.
4. ALL LANDSCAPING TO BE RESTORED TO ORIGINAL CONDITION OR BETTER.
5. ALL EQUIPMENT TO BE BONDED.
6. METERING CABINET REQUIRES 36" CLEARANCE AT DOOR OPENING.
7. CAULK CABINET BASE AT PAD.

NORMAL LOCATION OF UNDERGROUND UTILITIES NOTES:

1. LOCATION AND DEPTH OF EXISTING AND PROPOSED UTILITIES MUST BE PROVIDED BY THE SUBDIVIDER AND SHOWN ON ANY PLANS SUBMITTED TO THE DEPT. OF PUBLIC WORKS FOR APPROVAL.
2. CHANGES MAY BE PERMITTED BY THE DEPT. OF PUBLIC WORKS IN CASES OF CONFLICTING FACILITIES.
3. CONFLICTS BETWEEN UTILITY COMPANIES FACILITIES, EXISTING AND PROPOSED, MUST BE MUTUALLY RESOLVED BY THE UTILITY COMPANIES.
4. FOR COMMERCIAL SIDEWALKS, THE FIRE HYDRANT SHALL BE PLACED WITHIN THE SIDEWALK 1'-6" BEHIND FACE OF CURB.
5. MAXIMUM 2" DIAMETER GAS MAINS MAY BE PLACED IN JOINT UTILITIES TRENCH SUBJECT TO APPROVAL OF CITY ENGINEER (IN TRACTS).

CALIFORNIA STATE CODE COMPLIANCE:

ALL WORK AND MATERIALS SHALL BE PREFORMED AND INSTALLED IN ACCORDANCE WITH THE CURRENT EDITIONS OF THE FOLLOWING CODES AS ADOPTED BY THE LOCAL GOVERNING AUTHORITIES. NOTHING IN THESE PLANS IS TO BE CONSTRUCTED TO PERMIT WORK NOT CONFORMING TO THESE CODES:

- CALIFORNIA ADMINISTRATIVE CODE (INCLUDING TITLES 24 & 25) 2010
- 2010 CALIFORNIA BUILDING CODES WHICH ADOPTS THE 2010 UBC, 2010 UMC, 2010 UPC AND THE 2010 NEC.
- BUILDING OFFICIALS & CODE ADMINISTRATORS (BOCA)
- 2010 CALIFORNIA MECHANICAL CODE
- ANSI/EIA-222-F LIFE SAFETY CODE NFPA-101
- 2010 CALIFORNIA PLUMBING CODE
- 2010 CALIFORNIA ELECTRICAL CODE
- 2010 LOCAL BUILDING CODE
- CITY/COUNTY ORDINANCES

ACCESSIBILITY REQUIREMENTS:
FACILITY IS UNMANNED AND NOT FOR HUMAN HABITATION. HANDICAPPED ACCESS REQUIREMENTS DO NOT APPLY IN ACCORDANCE WITH THE 2010 CALIFORNIA BUILDING CODE.

FCC NOTE:
THIS WIRELESS COMMUNICATION FACILITY COMPLIES WITH FEDERAL STANDARDS FOR RADIO FREQUENCY IN ACCORDANCE WITH THE TELECOMMUNICATION ACT OF 1996 AND SUBSEQUENT AMENDMENTS AND ANY OTHER REQUIREMENTS IMPOSED BY STATE OR FEDERAL REGULATORY AGENCIES.

ASG09

PHASE II

CROWN CASTLE PROJECT NO.

242727

CLIENT:

CROWN CASTLE

200 SPECTRUM CENTER DRIVE, 18TH FLOOR
IRVINE, CA 92618
www.crowncastle.com

PREPARED BY:

Coastal Communications
Telecommunications Engineering

5841 EDISON PLACE, SUITE 200
CARLSBAD, CA 92008
PHONE: (760) 929-0910
FAX: (760) 929-0936

PROPRIETARY INFORMATION

THE INFORMATION CONTAINED IN THIS SET OF DRAWINGS IS PROPRIETARY AND CONFIDENTIAL TO AT&T. ANY USE OR DISCLOSURE OTHER THAN AS IT RELATES TO AT&T IS STRICTLY PROHIBITED.

DIGALERT

1-800-227-2600
CALL AT
LEAST TWO
DAYS BEFORE
YOU DIG

UNDERGROUND SERVICE ALERT
TICKET #_____

REVISION / ISSUE	DATE
CITY REDLINE	11/09/15
MOVED CISH AND CATV PEDESTAL	7/11/17

SITE NAME & ADDRESS:

ASG09
30462 CAMINO PORVENIR
RANCHO PALOS VERDES, CA

DETAILS & NOTES

DRAWN BY:	DRAFT DATE:	APPROVED BY:
AC	10/07/15	GA

SHEET NO.

D-1

4' X 6' X 4' GROUND VAULT RADIO ENCLOSURE
(TYPICAL SECTION: N.T.S)

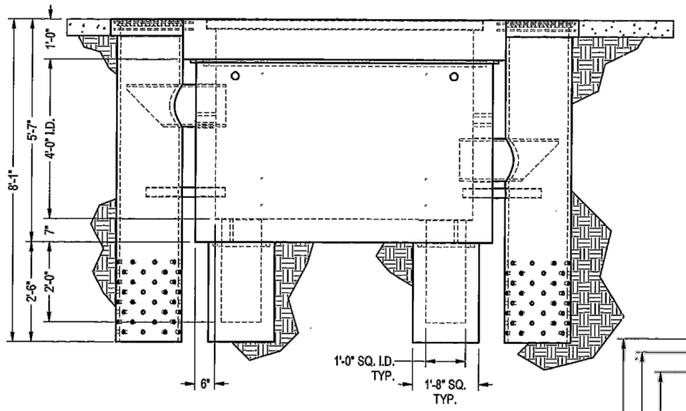

ELEVATION VIEW

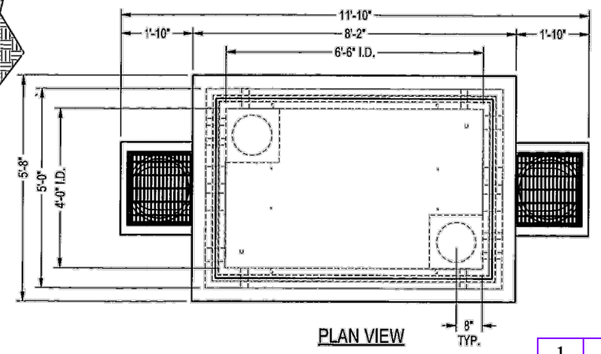

PLAN VIEW

1	SCALE
	N.T.S.

4' X 6' X 4' GROUND VAULT RADIO ENCLOSURE

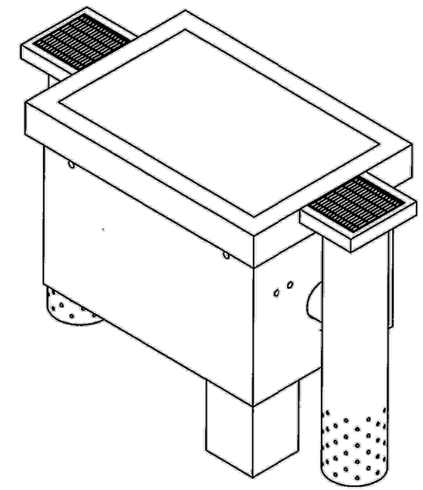

ISO VIEW

2	SCALE
	N.T.S.

Electrical

Power Supply
Mains Power, Vac. ..... 85 to 264
..... 115 or 230
Power consumption, watts 1150

Optical

Connectors ..... E2000/APC 8°
Optical return loss, dB ..... 45 minimum
Fiber type, mm ..... Single mode E9/125
Optical link budget, dB ..... 0 to 10
Composite input power
@ OTRx master side, dBm
1900 MHz ..... +5 composite
1700 / 2100 MHz..... +5 composite

Interface

BTS Side
Number of connectors
1900 MHz 4
1700/2100 MHz 4

System optimized for BTS power, dBm
..... 33
..... 43

Antenna Port
Connector ..... 7/16 Female
Output power ..... See band specification
Return loss, dB 15

1700/2100 MHz (AWS)

Frequency range, MHz
Uplink..... 1710 to 1755
Downlink..... 2110 to 2155

Output power per carrier, dBm*

Number of Carriers	1	2	4	8
GSM	45	42	39	36
CDMA	45	42	39	36
UMTS	45	42	39	36
LTE	45	42**	39	36

Spurious emission ..... < -13 dBm / 1 MHz

Adjacent chanel power, dBc ..... -48
DL output tolerance over frequency, dB ..... ±1
DL output tolerance over temperature, dB 0.5***
Input ICP3, dBm
ICP3 optimized ..... -12
Noise figure optimized ..... -18

Noise figure, dB
ICP3 optimized 7
..... 11 max.
Noise figure optimized 4.5
..... 6 max.

1900 MHz (AWS)

Frequency range, MHz
Uplink..... 1850 to 1915
Downlink..... 1930 to 1995

Output power per carrier, dBm*

Number of Carriers	1	2	4	8
GSM	45	42	39	36
CDMA	45	42	39	36
UMTS	45	42	39	36
LTE	45	42**	39	36

Spurious emission ..... < -13 dBm / 1 MHz
DL output tolerance over frequency, dB ..... ±1
DL output tolerance over temperature, dB 0.5***
Input ICP3, dBm
ICP3 optimized ..... -12
Noise figure optimized ..... -18

Noise figure, dB
ICP3 optimized 7
..... 11 max.
Noise figure optimized 4.5
..... 6 max.

System Supervision and Control

Commands ..... RF on/off
External control parts

Alarms ..... Summary
..... Power Supply
..... Optical UL and DL failure
..... Temperature

Supervision ..... Output power on a per-channel and per-band basis (optional)

Mechanical**

Height, width, depth mm (in) ..... 817 x 245 x 218
(32.2 x 9.61 x 8.6)
Weight, kg (lb) 40 (88.2)

Environmental

Operation temperature range ..... -33° C to +50° C
Ingress protection RF part..... IP67
Fan part..... IP55

* Applicable to single modulation mode only
** 3db power reduction @ < 5MHz carrier bandwith
*** With active cooling
**** Spacing required 40 mm (1.58 in) around unit
**** With passive cooling maximum temperature +40° C

All figures are typical values.

ANDREW ION-M17HP/19HP
MULTI-BAND, MULTI-OPERATOR
REMOTE OPTICAL SYSTEM

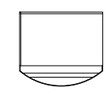

Top

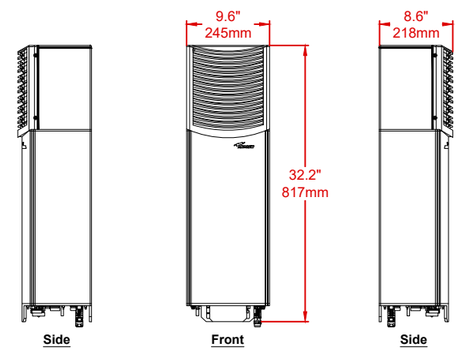

Side Front Side

3	SCALE
	N.T.S.

ASG09
PHASE II
CROWN CASTLE PROJECT NO.
242727

CLIENT:
CROWN CASTLE
200 SPECTRUM CENTER DRIVE, 18TH FLOOR
IRVINE, CA 92618
www.crowncastle.com

PREPARED BY:
Coastal Communications
Telecommunications Engineering
5841 EDISON PLACE, SUITE 200
CARLSBAD, CA 92008
PHONE: (760) 929-0910
FAX: (760) 929-0936

PROPRIETARY INFORMATION

THE INFORMATION CONTAINED IN THIS SET OF DRAWINGS IS PROPRIETARY AND CONFIDENTIAL TO AT&T. ANY USE OR DISCLOSURE OTHER THAN AS IT RELATES TO AT&T IS STRICTLY PROHIBITED.

DIGALERT
1-800-227-2600
CALL AT LEAST TWO DAYS BEFORE YOU DIG
UNDERGROUND SERVICE ALERT
TICKET #

REVISION / ISSUE	DATE
CITY REDLINE	11/09/15
MOVED CISH AND CATV PEDESTAL	7/11/17

SITE NAME & ADDRESS:
ASG09
30462 CAMINO PORVENIR
RANCHO PALOS VERDES, CA

DETAILS & NOTES

DRAWN BY:	DRAFT DATE:	APPROVED BY:
AC	10/07/15	GA

SHEET NO.
D-2

HPA-65F-BUU-H2

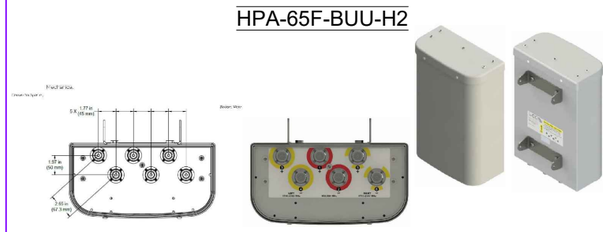

Ports	2 x Low Band Ports which cover the full range from 698-894 MHz		4 x High Band Ports which cover the full range from 1710-2360 MHz			
Frequency Range	698-806 MHz	824-894 MHz	1850-1990 MHz	1710-1755/2110-2170 MHz	2305-2360 MHz	
Gain	10.0 dBi	10.5 dBi	12.8 dBi	12.6 dBi	13.6 dBi	14.0 dBi
Azimuth Beamwidth (-3dB)	65°	62°	64°	66°	60°	59°
Elevation Beamwidth (-3dB)	40.0°	35.8°	17.5°	17.6°	15.8°	14.3°
Electrical Downtilt	4°	4°	3°	3°	3°	3°
Elevation Sidelobes (1st Upper)	< -15 dB	< -13 dB	< -13 dB	< -17 dB	< -13 dB	< -17 dB
Front-to-Back Ratio @180°	> 28 dB	> 28 dB	> 30 dB	> 30 dB	> 30 dB	> 30 dB
Cross-Polar Port-to-Port Isolation	> 20 dB	> 20 dB	> 23 dB	> 23 dB	> 23 dB	> 23 dB
Voltage Standing Wave Ratio (VSWR)	< 1.5:1	< 1.5:1	< 1.5:1	< 1.5:1	< 1.5:1	< 1.5:1
Passive Intermodulation (2x20W)	≤ -150 dBc	≤ -150 dBc	≤ -150 dBc	≤ -150 dBc	≤ -150 dBc	≤ -150 dBc
Input Power Continuous Wave (CW)	500 watts	500 watts	300 watts	300 watts	300 watts	300 watts
Polarization	Dual Pol 45°	Dual Pol 45°	Dual Pol 45°	Dual Pol 45°	Dual Pol 45°	Dual Pol 45°
Input Impedance	50 ohms	50 ohms	50 ohms	50 ohms	50 ohms	50 ohms
Lightning Protection	DC Ground	DC Ground	DC Ground	DC Ground	DC Ground	DC Ground

Mechanical

Dimensions (LxWxD)	21.4x14.4x7.3 in (544x366x185 mm)
Survival Wind Speed	> 150 mph (> 241 kph)
Front Wind Load	66 lbs (293 N) @ 100 mph (161 kph)
Side Wind Load	34 lbs (150 N) @ 100 mph (161 kph)
Equivalent Flat Plate Area	2.6 ft² (0.2 m²)
Weight *	15.2 lbs (6.9 kg)
Connector	6 x 7-16 DIN female long neck
Mounting Pole	2 to 5 in (5 to 12 cm)

* Weight excludes mounting

4 | SCALE N.T.S.

CONCEAL FAB TOP MOUNT & SHROUD (FOR HPA-65F-BUU-H2 ANTENNA)

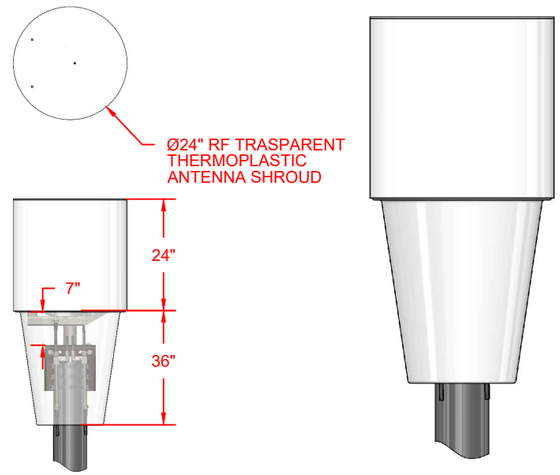

5 | SCALE N.T.S.

SQUARE D BY SCHNEIDER ELECTRIC LOAD CENTER, 70A

(MODEL #QO24L70RB)

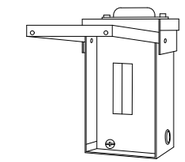

TECHNICAL CHARACTERISTICS

AMPERE RATING	70A
MAXIMUM SINGLE POLE CIRCUITS	4
WIDTH	4.88 INCHES
APPLICATION	DESIGNED TO MEET RESIDENTIAL, COMMERCIAL AND INDUSTRIAL REQUIREMENTS TO PROTECT ELECTRICAL SYSTEMS, EQUIPMENT AND PEOPLE.
SPACES	2
WIRE SIZE	#12 TO 3 AWG(AL) - #14 TO 4 AWG(CU)
MAXIMUM TANDEM CIRCUIT BREAKERS	2
VOLTAGE RATING	120/240VAC
WIRING CONFIGURATION	3-WIRE
PHASE	1-PHASE
DEPTH	4.00 INCHES
HEIGHT	9.38 INCHES
BUS MATERIAL	TIN PLATED ALUMINUM
COVER TYPE	SURFACE
CATALOG REFERENCE NUMBER	1100CT9901
ENCLOSURE TYPE	OUTDOOR/RAINPROOF
ENCLOSURE RATING	NEMA 3R
GROUNDING BAR	ORDER SEPARATELY
APPROVALS	UL LISTED
SHORT CIRCUIT CURRENT RATING	10KA
MAIN TYPE	FIXED - FACTORY INSTALLED MAIN LUGS

SHIPPING AND ORDERING

CATEGORY	00101 - LOAD CENTERS, 1 PHASE, NEMA1 & 3R, 2 - 8 CIRCUIT, TYPE QO
DISCOUNT SCHEDULEDE	3A
ARTICLE NUMBER	785901785132
PACKAGE QUANTITY	1
WEIGHT	5 LBS.
AVAILABILITY CODE	S
RETURNABILITY	Y

6 | SCALE N.T.S.

WTR FUSE BOX (FOR NEW POLES & STREET LIGHTS

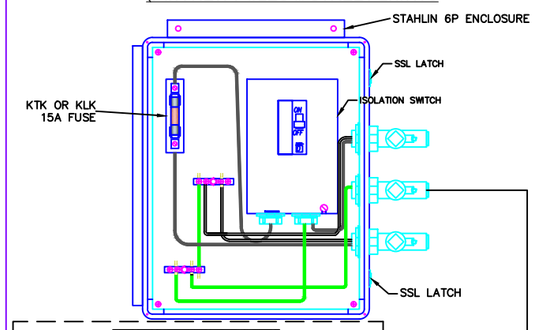

EYS SEALING FITTING

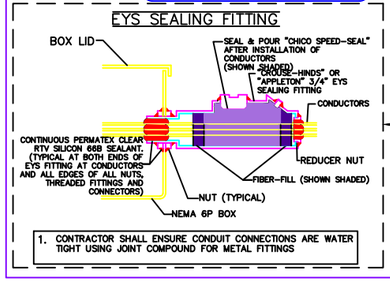

1. CONTRACTOR SHALL ENSURE CONDUIT CONNECTIONS ARE WATER TIGHT USING JOINT COMPOUND FOR METAL FITTINGS

7 | SCALE N.T.S.

GROUND ROD:

G1 GROUND ROD SHALL BE MINIMUM 0.625" DIA. x 9' LONG. COPPER CLAD.

G2 MINIMUM 3" EXPOSURE AT TOP OF FOUNDATION WITHIN BOLT CIRCLE.

NOT TO SCALE

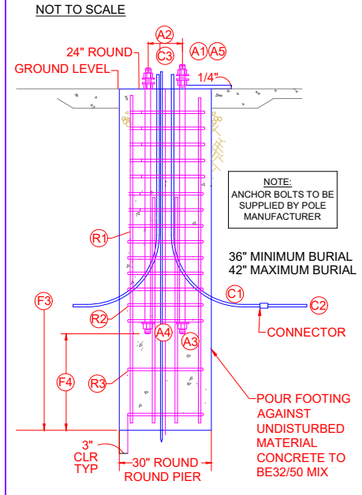

NEW POLE FOUNDATION

ANCHOR BOLTS:

A1 ANCHOR BOLTS SHALL BE 4-1" DIAMETER, AS GIVEN IN SPECIFICATIONS ASTM A449.

A2 BOLT CIRCLE DIAMETER TO MATCH POLE BASEPLATE.

A3 ANCHOR BOLTS SHALL HAVE HEADS, OR NUTS WITH THE THREADS STAKED AT TWO PLACES BELOW THE NUT, EMBEDDED IN FOUNDATION.

A4 ANCHOR BOLTS SHALL BE EMBEDDED 33" MINIMUM, BELOW STREET GRADE (63" EMBEDMENT IN CONCRETE).

A5 BOLT PROJECTION AS RECOMMENDED BY THE MANUFACTURER.

CONDUIT:

C1 CONDUIT SHALL BE RIGID STEEL. GALVANIZED, INSIDE THE FOUNDATION, WITH 6" MINIMUM STUB-OUT.

C2 SERVICE AND FEED CONDUITS SHALL BE RGS OR SCH 80 PVC, AS REQUIRED.

C3 STUB UP TO WITHIN 4" FROM HAND HOLE.

REINFORCEMENT:

R1 VERTICAL REBAR SHALL BE (7) #6 EQUALLY SPACED INSIDE OF HOOPS.

R2 HOOPS SHALL BE #4 X 18" I.D., SPACED 4" O/C FROM TOP OF FOUNDATION TO END OF ANCHOR BOLTS.

R3 HOOPS SHALL BE #4 X 18" I.D., SPACED 12" MIN. FROM THE ANCHOR BOLTS TO BOTTOM OF FOUNDATION.

R4 ALL REBAR SHALL HAVE 3" MINIMUM COVERING.

F3 5' DEPTH

F4 2' DEPTH

8 | SCALE N.T.S.

VAULT DETAIL (FLUSH MOUNT)

COVER FEATURES:
* PW - 10,400 LBS. WHEEL LOAD ON 10" X 10" PLATE.
* APPROX. WT. = 72 LBS.
* POLYMER CONCRETE
* ONE PIECE COVER
* FOUR BOLT DOWN
* COLOR: CONCRETE GREY
* NON - SKID SURFACE
* LID TO HAVE H-20 TRAFFIC LOAD FRICTION COEFFICIENT TO BE 0.5 OR MORE

HANDHOLE FEATURES:
* POLYMER CONCRETE RING AND FIBERGLASS REINFORCED POLYMER BODY
* COLOR OF RING:CONCRETE GREY
* APPROX. WT. = 123 LBS.

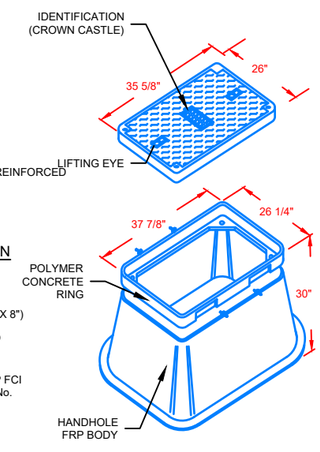

GROUND ROD INSTALLATION

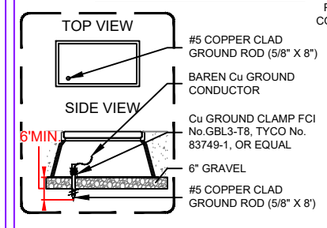

9 | SCALE N.T.S.

ASG09

PHASE II

CROWN CASTLE PROJECT NO.

242727

CLIENT:

CROWN CASTLE

200 SPECTRUM CENTER DRIVE, 18TH FLOOR
IRVINE, CA 92618
www.crowncastle.com

PREPARED BY:

Coastal Communications
Telecommunications Engineering

5841 EDISON PLACE, SUITE 200
CARLSBAD, CA 92008
PHONE: (760) 929-0910
FAX: (760) 929-0936

PROPRIETARY INFORMATION

THE INFORMATION CONTAINED IN THIS SET OF DRAWINGS IS PROPRIETARY AND CONFIDENTIAL TO AT&T. ANY USE OR DISCLOSURE OTHER THAN AS IT RELATES TO AT&T IS STRICTLY PROHIBITED.

DIGALERT

1-800-227-2600
CALL AT LEAST TWO DAYS BEFORE YOU DIG

UNDERGROUND SERVICE ALERT TICKET #

REVISION / ISSUE	DATE
CITY REDLINE	11/09/15
MOVED CISH AND CATV PEDESTAL	7/11/17

SITE NAME & ADDRESS:

ASG09
30462 CAMINO PORVENIR
RANCHO PALOS VERDES, CA

DETAILS & NOTES

DRAWN BY:	DRAFT DATE:	APPROVED BY:
AC	10/07/15	GA

SHEET NO.

D-3

IN DIRT
TYPICAL SECTION
(N.T.S.)

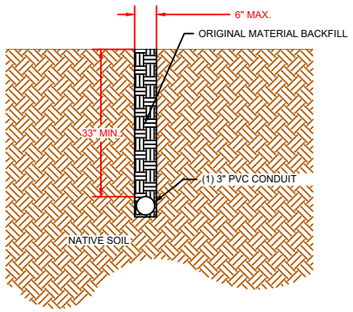

INSTALLATION NOTES:

-CUT 6" MAX. WIDTH X 33" + DEPTH TRENCH
-BACKFILL WITH THE ORIGINAL MATERIAL FROM THE TRENCH
-RESTORE THE SURFACE

10 | SCALE N.T.S.

STAHLIN 6P ENCLOSURE
(MODEL #J1412HPL)

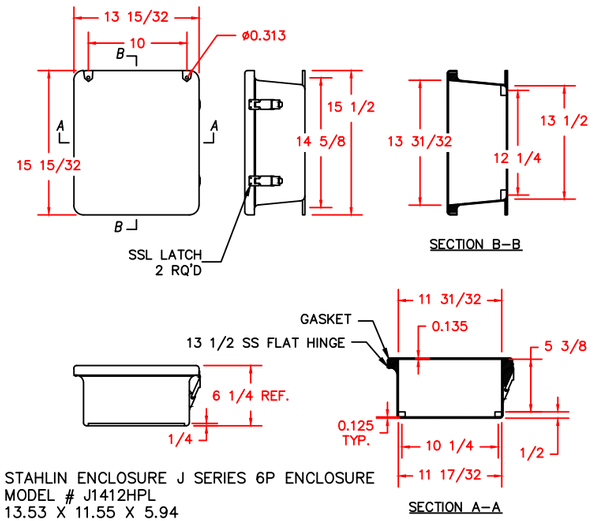

STAHLIN ENCLOSURE J SERIES 6P ENCLOSURE
MODEL # J1412HPL
13.53 X 11.55 X 5.94
WEIGHT: 6.5 lbs

11 | SCALE N.T.S.

GROUND ROD INSTALLATION FOR STEEL POLE
TYPICAL SECTION: N.T.S.

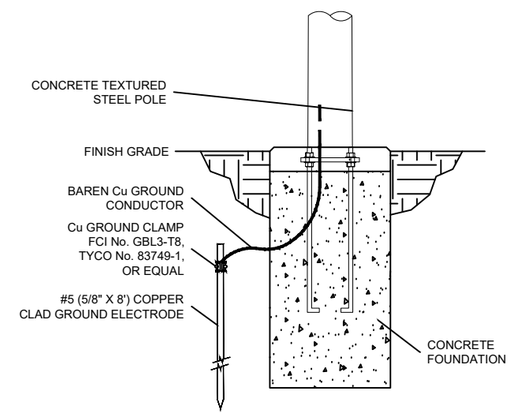

12 | SCALE N.T.S.

NOT USED

N/A | SCALE N.T.S.

NOT USED

N/A | SCALE N.T.S.

NOT USED

N/A | SCALE N.T.S.

ASG09
PHASE II
CROWN CASTLE PROJECT NO.
242727

CLIENT:
CROWN CASTLE
200 SPECTRUM CENTER DRIVE, 18TH FLOOR
IRVINE, CA 92618
www.crowncastle.com

PREPARED BY:
Coastal Communications
Telecommunications Engineering
5841 EDISON PLACE, SUITE 200
CARLSBAD, CA 92008
PHONE: (760) 929-0910
FAX: (760) 929-0936

PROPRIETARY INFORMATION

THE INFORMATION CONTAINED IN THIS SET OF DRAWINGS IS PROPRIETARY AND CONFIDENTIAL TO AT&T. ANY USE OR DISCLOSURE OTHER THAN AS IT RELATES TO AT&T IS STRICTLY PROHIBITED.

DIGALERT
1-800-227-2600
CALL AT LEAST TWO DAYS BEFORE YOU DIG
UNDERGROUND SERVICE ALERT
TICKET #_____

REVISION / ISSUE	DATE
CITY REDLINE	11/09/15
MOVED CISH AND CATV PEDESTAL	7/11/17

SITE NAME & ADDRESS:
ASG09
30462 CAMINO PORVENIR
RANCHO PALOS VERDES, CA

DETAILS & NOTES

DRAWN BY:	DRAFT DATE:	APPROVED BY:
AC	10/07/15	GA

SHEET NO.
D-4

SPECIFICATIONS

ION-M7HP/85HP EU - Product Specification

Electrical

Mains power, Vac
- nominal . . . . . 100 to 240
- operating . . . . . 85 to 264

Mains power, Vdc
- nominal . . . . . 48 to 60
- operating . . . . . 36 to 72

Power consumption, W
- max. temp., fully loaded 900
- room temp., idle 380

Optical Link

Connectors . . . . . E2000/APC 8°

Optical return loss, dB 45

Fibre type . . . . . Single mode E9/125 µm

Optical link budget, dB . . . . . 0 to 10

Composite input power @ OTRx master side, dBm
700 MHz
- minimum . . . . . -16.5
- nominal 5.5

850 MHz
- minimum . . . . . -16.5
- nominal 5.5

RF Interface

BTS Side (SMA)
Number of connectors — Standard
- 700 MHz 4
- 850 MHz 4

System optimized for BTS power, dBm
- 33
- 43

Remote Unit antenna port
Connectors . . . . . 7/16 Female
Return loss, dB 15

700 MHz

Frequency range, MHz
- Uplink . . . . . 698 to 716/776 to 787
- Downlink . . . . . 728 to 757

Output power per carrier, dBm*

Number of Carriers	1	2	4	8
LTE	45.5	42.5**	39.5	36.5

DL output tolerance over frequency, dB . . . . . ±1
DL output tolerance over temperature, dB . . . . . ±0.5

Spurious emission . . . . . <-13 dBm / 1 MHz

Spurious emission into Public Safety Narrowband
. . . . . <-46 dBm / 6.25 kHz

Input ICP3, dBm***
- ICP3 optimized . . . . . -11 min.
- Noise figure optimized . . . . -18 min.

Noise figure, dB***
- ICP3 optimized . . . . . 10 max.
- Noise figure optimized . . . . 6.0 max.
- . . . . . 5.0 typical

850 MHz

Frequency range, MHz
- Uplink . . . . . 824 to 849
- Downlink . . . . . 869 to 894

Output power per carrier, dBm*

Number of Carriers	1	2	4	8
Analog	45.5	42.5	39.5	36.5
GSM	45.5	42.5	39.5	36.5
CDMA	45.5	42.5	39.5	36.5
LTE	45.5	42.5**	39.5	36.5
UMTS	45	42	39	36

DL output tolerance over frequency, dB . . . . . ±1
DL output tolerance over temperature, dB . . . . . ±0.5

Spurious emission . . . . . <-13 dBm / 1 MHz

Input ICP3, dBm***
- ICP3 optimized . . . . . -11 min.
- Noise figure optimized . . . . -18 min.

Noise figure, dB***
- ICP3 optimized . . . . . 10 max.
- Noise figure optimized . . . . 6 max.
- . . . . . 5 typical

* PAR 7.5 dB @ 0.1%
** 2 dB power reduction @ < 5 MHz carrier bandwidth
*** from reference point B to A

All figures are typical values unless otherwise stated

SPECIFICATIONS

ION-M7HP/85HP EU - Product Specification

System Supervision and Control

Commands . . . . . RF on/off

Alarms . . . . . Summary
- . . . . . Power Supply
- . . . . . RF UL and DL failure
- . . . . . Temperature

Supervision . . . . . Composite output power

Mechanical*

Height, width, depth, mm (in)
- AC Version . . . . . 817 x 245 x 218 (32.2 x 9.6 x 8.6)
- DC Version . . . . . 1053 x 245 x 218 (41.5 x 9.6 x 8.6)

Weight, kg (lb) 40 (88.2)

Environmental

Operating temperature range, °C . . . . . -33 to +50

Ingress protection
- RF part IP67
- Fan part IP55

Ordering Information

ION-M7HP/85HP EU 7693966**

Depending on the selected options and the configuration the ordering material number contains an identifying suffix.

Corresponding Main Unit

ION-M17HP/19HP 7631412**

Corresponding Master Unit OTRx

OTRx70-85/90/17-21 . . . . . 7604304-XX

* Spacing required 40 mm (1.58 in) around unit
** Subpopulations possible

All figures are typical values, unless otherwise stated.

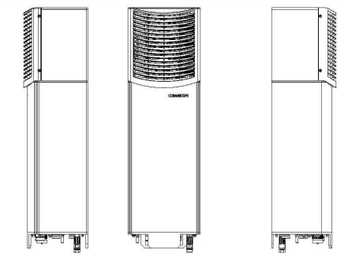

Cabinet of ION-M7HP/85HP Extension Unit (AC Version)

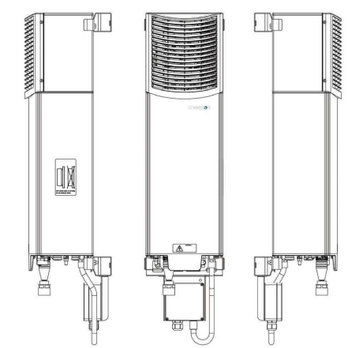

Cabinet of ION-M7HP/85HP Extension Unit (DC Version)

SCALE N.T.S.

ASG09

PHASE II

CROWN CASTLE PROJECT NO.
242727

CLIENT:
CROWN CASTLE
200 SPECTRUM CENTER DRIVE, 18TH FLOOR
IRVINE, CA 92618
www.crowncastle.com

PREPARED BY:
Coastal Communications
Telecommunications Engineering
5841 EDISON PLACE, SUITE 200
CARLSBAD, CA 92008
PHONE: (760) 929-0910
FAX: (760) 929-0936

PROPRIETARY INFORMATION

THE INFORMATION CONTAINED IN THIS SET OF DRAWINGS IS PROPRIETARY AND CONFIDENTIAL TO AT&T. ANY USE OR DISCLOSURE OTHER THAN AS IT RELATES TO AT&T IS STRICTLY PROHIBITED.

DIGALERT
1-800-227-2600
CALL AT LEAST TWO DAYS BEFORE YOU DIG
UNDERGROUND SERVICE ALERT
TICKET #

REVISION / ISSUE	DATE
CITY REDLINE	11/09/15
MOVED CISH AND CATV PEDESTAL	7/11/17

SITE NAME & ADDRESS:
ASG09
30462 CAMINO PORVENIR
RANCHO PALOS VERDES, CA

DETAILS & NOTES

DRAWN BY:	DRAFT DATE:	APPROVED BY:
AC	10/07/15	GA

SHEET NO.
D-5

A KEY MAP

B 12 O'CLOCK VIEW- FROM THE NORTHWEST

C 3 O'CLOCK VIEW- FROM THE NORTHEAST

D 9 O'CLOCK VIEW- FROM THE SOUTHWEST

ASG09

PHASE II

CROWN CASTLE PROJECT NO.

242727

CLIENT:

CROWN CASTLE

200 SPECTRUM CENTER DRIVE, 18TH FLOOR
IRVINE, CA 92618
www.crowncastle.com

PREPARED BY:

Coastal Communications
Telecommunications Engineering

5841 EDISON PLACE, SUITE 200
CARLSBAD, CA 92008
PHONE: (760) 929-0910
FAX: (760) 929-0936

PROPRIETARY INFORMATION

THE INFORMATION CONTAINED IN THIS SET OF DRAWINGS IS PROPRIETARY AND CONFIDENTIAL TO AT&T. ANY USE OR DISCLOSURE OTHER THAN AS IT RELATES TO AT&T IS STRICTLY PROHIBITED.

DIGALERT

1-800-227-2600
CALL AT LEAST TWO DAYS BEFORE YOU DIG

UNDERGROUND SERVICE ALERT
TICKET #_____

REVISION / ISSUE	DATE
CITY REDLINE	11/09/15
MOVED CISH AND CATV PEDESTAL	7/11/17

SITE NAME & ADDRESS:

ASG09
30462 CAMINO PORVENIR
RANCHO PALOS VERDES, CA

SITE PHOTOS

DRAWN BY:	DRAFT DATE:	APPROVED BY:
AC	10/07/15	GA

SHEET NO.

S-1

NEW CONSTRUCTION

- DECOMMISSION & REMOVE EXISTING 24' 0" HIGH MARBELITE OCTAGONAL STREETLIGHT (POLE ID #1983568E) AND REPLACE WITH A NEW 24' 0" HIGH CONCRETE TEXTURED STEEL POLE WITH MAST ARM AND LUMINARE (REMOVE EXISTING JUNIPER).
- INSTALL (1) CROWN CASTLE 4' X 6' VAULT, FLUSH MOUNT VENTS WITH, METER & POWER DISCONNECT BOX WITH (2) ML IONS INSIDE.
- INSTALL CROWN CASTLE WTR 2' X 3' VAULT.
- INSTALL (2) 21.4" ANTENNAS #HPA-65F-BUU-H2 WITH CONCEALFAB TOP MOUNT AND SHROUD.
- INSTALL VGR.
- EQUIPMENT AND ANTENNAS TO BE PAINTED TO MATCH POLE.

100AMP PANEL
120/240V 1PHASE
1.1KW 0TON
3787 1/2 CREST RD
RANCHO PALOS VERDES, CA 90274

NODE COORDINATE	
LATITUDE:	33.75670
LONGITUDE:	-118.40196

FOOTAGE TOTALS	
ASPHALT TRENCH	0
PUNCH THRU	0
DIRT TRENCH	10'
BORE	0'
TOTAL	10'
R&R TOTAL SWP	70 SQ. FT.

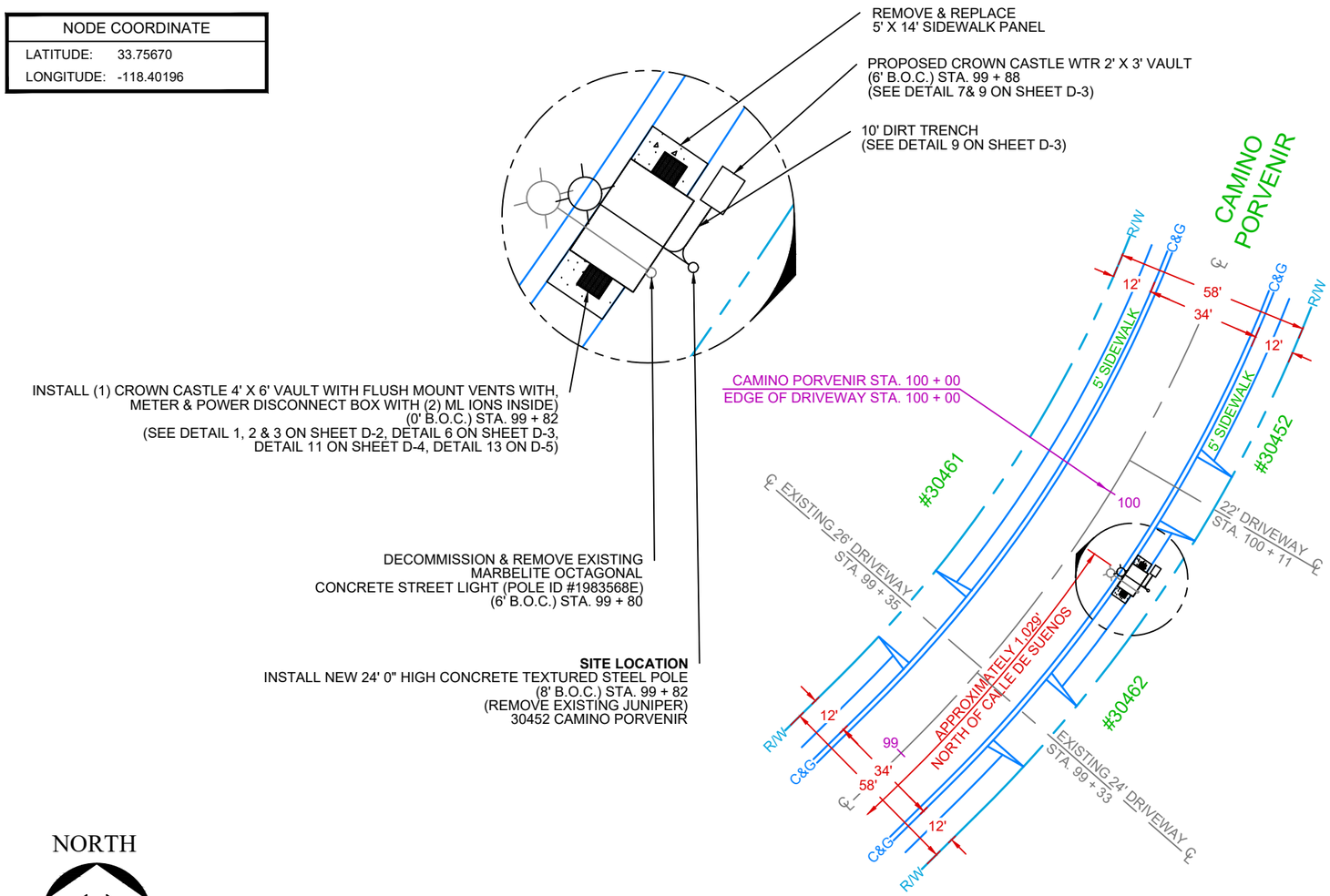

ASG09

PHASE II

CROWN CASTLE PROJECT NO.

242727

CLIENT:

CROWN CASTLE

200 SPECTRUM CENTER DRIVE, 18TH FLOOR
IRVINE, CA 92618
www.crowncastle.com

PREPARED BY:

Coastal Communications
Telecommunications Engineering

5841 EDISON PLACE, SUITE 200
CARLSBAD, CA 92008
PHONE: (760) 929-0910
FAX: (760) 929-0936

PROPRIETARY INFORMATION

THE INFORMATION CONTAINED IN THIS SET OF DRAWINGS IS PROPRIETARY AND CONFIDENTIAL TO AT&T. ANY USE OR DISCLOSURE OTHER THAN AS IT RELATES TO AT&T IS STRICTLY PROHIBITED.

DIGALERT

1-800-227-2600
CALL AT LEAST TWO DAYS BEFORE YOU DIG

UNDERGROUND SERVICE ALERT
TICKET #_____

REVISION / ISSUE	DATE
CITY REDLINE	11/09/15
MOVED CISH AND CATV PEDESTAL	7/11/17

SITE NAME & ADDRESS:

ASG09
30462 CAMINO PORVENIR
RANCHO PALOS VERDES, CA

SITE PLAN

DRAWN BY:	DRAFT DATE:	APPROVED BY:
AC	10/07/15	GA

SHEET NO.

P-1

A ANTENNA DETAILS — SCALE: 1:5

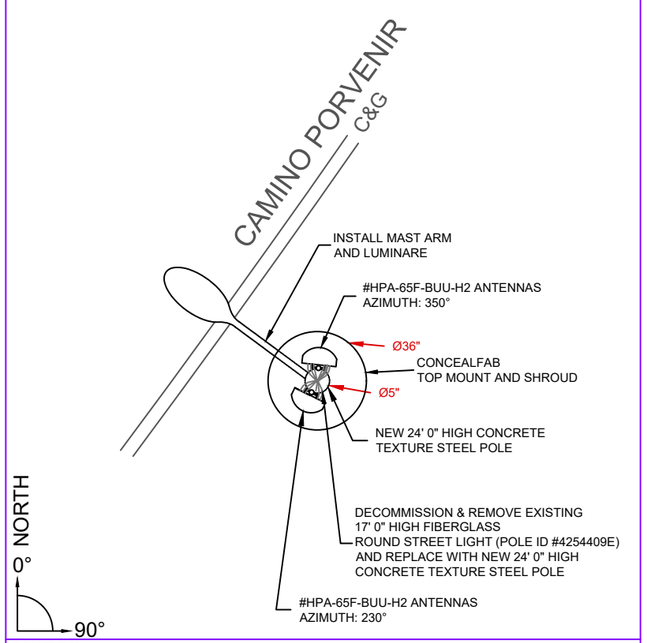

NOTES:

STREETLIGHT #1983568E
TOP OF EXISTING POLE: 24' 0"
TOP OF NEW POLE: 24' 0"
TOP OF ANTENNA: 26' 7"
RAD CENTER: 25' 7"
AZIMUTHS: 350° & 230°

EQUIPMENT AND ANTENNAS TO BE PAINTED TO MATCH POLE.

B 12 O'CLOCK VIEW — SCALE: 1:5

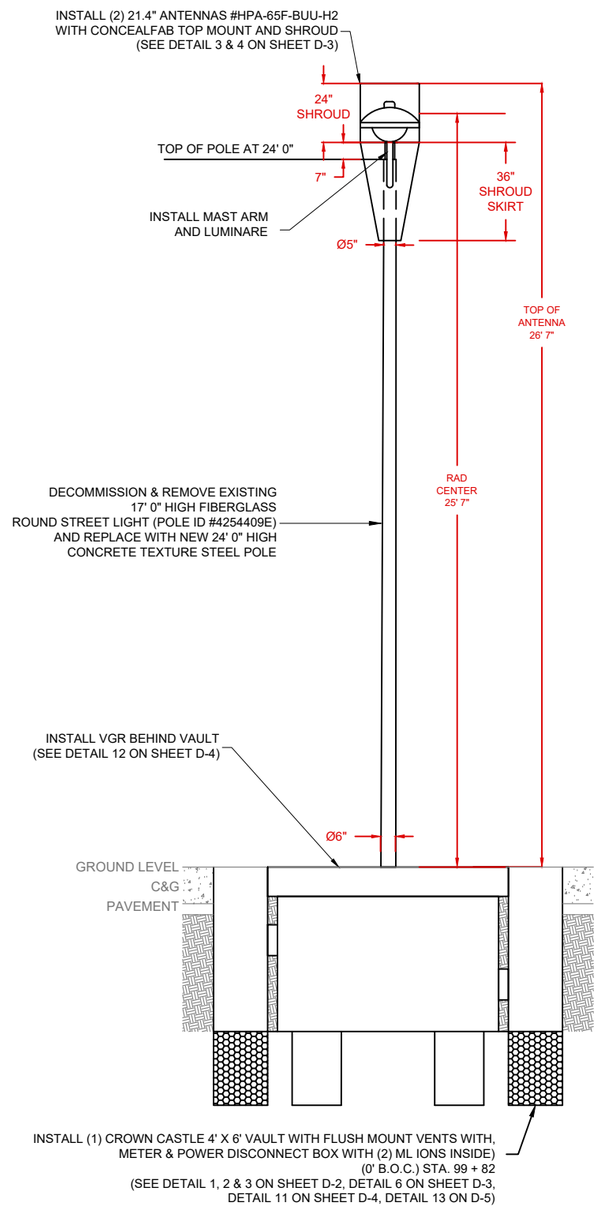

B 3 O'CLOCK VIEW — SCALE: 1:5

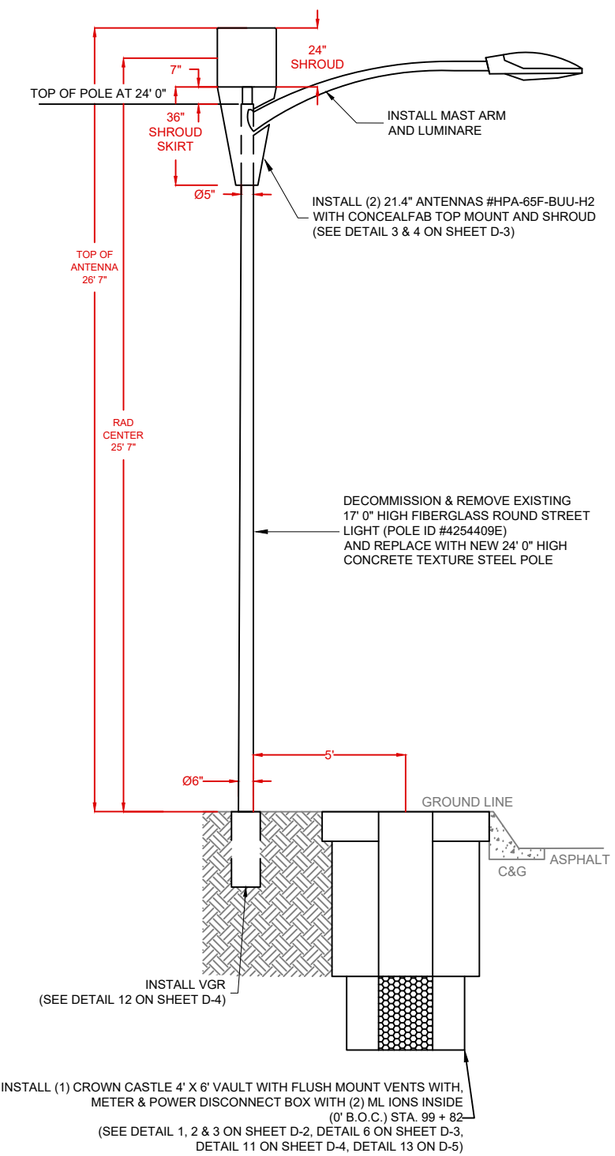

ASG09

PHASE II

CROWN CASTLE PROJECT NO.
242727

CLIENT:
CROWN CASTLE
200 SPECTRUM CENTER DRIVE, 18TH FLOOR
IRVINE, CA 92618
www.crowncastle.com

PREPARED BY:
Coastal Communications
Telecommunications Engineering
5841 EDISON PLACE, SUITE 200
CARLSBAD, CA 92008
PHONE: (760) 929-0910
FAX: (760) 929-0936

PROPRIETARY INFORMATION

THE INFORMATION CONTAINED IN THIS SET OF DRAWINGS IS PROPRIETARY AND CONFIDENTIAL TO AT&T. ANY USE OR DISCLOSURE OTHER THAN AS IT RELATES TO AT&T IS STRICTLY PROHIBITED.

DIGALERT
1-800-227-2600
CALL AT LEAST TWO DAYS BEFORE YOU DIG
UNDERGROUND SERVICE ALERT
TICKET # _____

REVISION / ISSUE	DATE
CITY REDLINE	11/09/15
MOVED CISH AND CATV PEDESTAL	7/11/17

SITE NAME & ADDRESS:
ASG09
30462 CAMINO PORVENIR
RANCHO PALOS VERDES, CA

POLE PROFILE

DRAWN BY:	DRAFT DATE:	APPROVED BY:
AC	10/07/15	GA

SHEET NO.
P-2